CONCRETE INSTITUTE of AUSTRALIA





excellence in concrete

RECOMMENDED PRACTICE

Shotcreting in Australia

Third Edition

Prepared by:

AuSS
Australian Shotcrete Society

CONCRETE INSTITUTE of AUSTRALIA

RECOMMENDED PRACTICE

Shotcreting in Australia

THIRD EDITION

Prepared by:

AuSS
Australian Shotcrete Society

CONCRETE INSTITUTE of AUSTRALIA

AuSS Australian Shotcrete Society

Concrete Institute of Australia is a national membership-based not-for-profit organisation formed to provide a forum for the exchange of information between its members and others. Since the information contained in its publications is intended for general guidance only and in no way replaces the services of professional consultants on particular projects, no legal liability for negligence or otherwise can be accepted by the Institute for the information contained in this publication.

No part of this publication may be reproduced in whole or in part, or stored in a retrieval system, or transmitted in any form or by any means, electronic, mechanical, photocopying, recording or otherwise, without written permission of the publisher. This book is sold subject to the condition that it shall not be lent, resold, hired out, or otherwise circulated without the publisher's prior consent in any form of binding or cover other than that in which it is published. This condition being imposed on any subsequent purchasers.

For information regarding permission, write to:

Concrete Institute of Australia
PO Box 1227
North Sydney NSW 2059 Australia

Email: technical@concreteinstitute.com.au

Concrete Institute of Australia
National Office
Suite 401, Level 4
53 Walker Street
North Sydney NSW 2060 Australia

PO Box 1227
North Sydney NSW 2059 Australia

PHONE: +61 2 9955 1744
EMAIL: technical@concreteinstitute.com.au
WEBSITE: www.concreteinstitute.com.au

For contact information on Institute Branches and networks in Queensland, New South Wales, Victoria, Tasmania, South Australia and Western Australia visit the web site at:

www.concreteinstitute.com.au

The **Australian Shotcrete Society** was formed in 1998 as a not-for-profit industry group committed to improving recognition of the value and uses of shotcrete in the Australian mining and construction industries. Its objectives are to promote the use of shotcrete where appropriate, promote good shotcreting practice, and to educate specifiers and potential designers of shotcrete structures about the best means of using this material. These objectives have been undertaken through seminars and conferences that are held from time to time, and through the publication of this guide.

The Concrete Institute of Australia was selected as a partner in publishing this guide because it is the most appropriate institution for the promotion of good concrete practice and technology within Australia.

For further information on the **Australian Shotcrete Society,** contact the Chairman:

Dr Stefan Bernard
Australian Shotcrete Society
PHONE: +61 418 407 892
EMAIL: s.bernard@tse.net.au

Originally produced by TechMedia Publishing Pty Ltd for Concrete Institute of Australia ACN 000 715 453

Z5 First published 1987 as "Sprayed Concrete".

Rewritten and republished April 2008 as First Edition "Shotcreting in Australia".

Updated and published September 2010 as Second Edition "Shotcreting in Australia".

Updated and published August 2020 as Third Edition "Shotcreting in Australia".

ISBN: 978-0-909375-06-5 – Print
ISBN: 978-0-909375-07-2 – Electronic (pdf)

Preface

This document has been written as a guide to the use of shotcrete in Australia. It is based on established practice within the Australian context and is targeted toward designers, specifiers, owners, suppliers, contractors and other end-users of shotcrete. From limited beginnings in the 1960s, shotcrete has emerged as the first choice for ground support in the tunnelling, general construction, and underground mining industries and is increasingly being used in other applications. Shotcrete is an evolving technology and users of this guide must appreciate that the contents represent the state of knowledge and practice at the date of publication and may be subject to change.

This guide has been prepared by the Australian Shotcrete Society, a special interest group within the Australian Tunnelling Society (ATS). The ATS is affiliated with Engineers Australia. The Australian Shotcrete Society wishes to acknowledge the valuable input provided by the many practitioners who have contributed to its development from both within the society, ATS, and the broader shotcreting community, in particular the Concrete Institute of Australia. This guide was edited by Dr Stefan Bernard. The editorial committee for the development of this guide has included the following individuals:

Tony Cooper
John Gelson
Matthew Hicks
David Hocking
Warren Mahoney
Stephen Duffield
Phil Clark
David Oliveira
Christian Bodner
Robert Nievergelt, and
Kan Lean Seah.

In addition, numerous individuals also contributed to the development of this edition of the guide. These include John Kennedy, Harry Lyle, Matthew McInnes, Shan Kumar, Des Vlietstra, Harry Asche and Jurij Karlovsek, and the staff of The Rix Group who provided numerous photographs for the document. In addition, earlier editions of the guide were written with the participation of John Ashby, John Brown, Angus Peruzzo, Kath Winder, Marc Jolin, Pete Tatnall, Rusty Morgan. The editorial committee thanks these individuals and their employers for their contribution to the guide.

The guide has been arranged into chapters and clauses covering specific areas of information relevant to shotcrete technology. The behaviour of structures made with shotcrete more closely resembles that of cast concrete structures than any other type of structure. In the absence of an Australian Standard on shotcrete the chapters within this guide related to design have been organised in a broadly-similar manner to AS 3600 Concrete Structures, and AS 5100 Bridge Design, to facilitate a complementary approach to structural design.

Contents

vii **LIST OF TABLES AND FIGURES**

1 **INTRODUCTION**

1.1 Scope
1.2 Definitions
1.3 Types of Shotcrete
1.4 Uses for Shotcrete
1.4.1 General
1.4.2 Tunnelling
1.4.3 Caverns
1.4.4 Ground Support in Mining
1.4.5 Commercial Buildings
1.4.6 Ground Excavation for Basements and Car Parks
1.4.7 Backfill of Subsidence or over Excavated Surfaces
1.4.8 Complex Civil Structures
1.4.9 Channels/Reservoirs and Spillways
1.4.10 Embankment Stabilisation
1.4.11 Swimming Pools and Skateboard Parks
1.4.12 Refractories
1.4.13 Repair, Restoration and Strengthening
1.4.14 Fire Proofing
1.4.15 Decorative Finishes
1.4.16 Explosion-Proof Structures
1.4.17 Drainage Culverts and Lined Drains
1.4.18 Bridge Abutments and Drainage Walls
1.4.19 Matching or Replacing Concrete Elements
1.4.20 Smoothing Layers
1.5 History

2 **DESIGN OF ABOVE-GROUND STRUCTURES MADE WITH SHOTCRETE**

2.1 Design Considerations for Basic Properties
2.1.1 Design for Stability
2.1.2 Design for Strength
2.1.3 Design for Serviceability
2.1.4 Design for Appearance
2.1.5 Design for Durability
2.1.6 Design for Fire Resistance
2.1.7 Design for Other Requirements
2.1.8 Design Considerations for the Shotcrete Matrix
2.1.9 Testing
2.2 Design Considerations for Reinforcement
2.2.1 General
2.2.2 Unreinforced Shotcrete
2.2.3 Conventional Reinforcement
2.2.4 Fibre Reinforcement

3 **DESIGN OF SHOTCRETE LININGS FOR CIVIL TUNNELS**

3.1 Introduction
3.2 Legislative and Safety Context
3.2.1 Workplace Health and Safety
3.2.2 Safe Design
3.2.3 Client Responsibilities
3.2.4 Principal Contractor Responsibilities
3.2.5 Designer Responsibilities
3.2.6 Risk Management
3.3 Codes and Standards
3.4 Design Considerations
3.4.1 Functional Requirements
3.4.2 Design for Strength and Serviceability
3.5 Quality Control and Compliance
3.5.1 Typical Material Requirements
3.5.2 Resolving Non-compliance
3.5.3 Construction Monitoring
3.6 Maintenance and Repair
3.6.1 General
3.6.2 Inspection Regimes
3.6.3 Repair of Defects that Affect Long-term Performance
3.6.4 Repairs Following Major Damage Events

4 **DESIGN CONSIDERATIONS IN MINING**

4.1 Design Considerations for Basic Properties
4.1.1 Design for Strength in Mining
4.1.2 Design for Durability in Mining
4.1.3 Design for Other Requirements
4.2 Design Considerations for Reinforcement
4.2.1 General
4.2.2 Unreinforced Shotcrete
4.2.3 Conventional Reinforcement
4.2.4 Fibre Reinforcement
4.3 Design Considerations for Underground Metalliferous Mining
4.3.1 Design for Strength
4.3.2 Design for Serviceability
4.3.3 Design for Durability
4.3.4 Other Design Factors
4.4 Design Considerations for Underground Coal Mines

5 **MATERIAL PROPERTIES**

5.1 Slump
5.2 Compressive Strength
5.3 Early-Age Strength
5.4 Flexural Strength
5.5 Toughness
5.6 Density
5.6.1 General
5.6.2 Density of Fresh Shotcrete
5.6.3 Density of Hardened Shotcrete
5.7 Modulus of Elasticity
5.8 Drying Shrinkage
5.9 Creep
5.10 Coefficient of Thermal Expansion
5.11 Durability
5.11.1 General
5.11.2 Chloride and Sulfate Content
5.11.3 Water Penetration through Bulk Shotcrete
5.11.4 Water Absorptivity and Compaction Testing
5.11.5 Alkali-Silica Reactivity (ASR)
5.12 Bond to Substrate

6 **CONSTITUENT MATERIALS**

6.1 Cement
6.2 Supplementary Cementitious Materials
6.2.1 Grade 1 Fly Ash
6.2.2 Special Grade Fly Ash
6.2.3 Silica Fume
6.2.4 Amorphous Silica other than Silica Fume
6.2.5 Slag – Ground Granulated Blast Furnace Slag (GGBFS)
6.3 Aggregates
6.4 Mixing Water
6.5 Chemical Admixtures
6.5.1 General
6.5.2 Water Reducers
6.5.3 Mid-Range Water Reducers (with or without set control properties)
6.5.4 High-Range Water Reducers (Superplasticisers)
6.5.5 Viscosity Modifying Admixtures (VMA)
6.5.6 Shrinkage Reducing Admixtures
6.5.7 Waterproof Admixtures
6.5.8 Internal Curing
6.5.9 Hydration Control Admixtures
6.5.10 Set Accelerators
6.5.11 Admixture for Clay Mitigation
6.6 Fibre Reinforcement
6.7 Steel Mesh or Bar Reinforcement
6.8 Other Additives

7 **MIX DESIGN**

7.1 General
7.2 Wet-Mix Shotcrete
7.3 Dry-Mix Shotcrete
7.4 Swimming Pool Mix Design
7.5 Special Mixes
7.6 Combined Aggregate Grading Curves
7.7 Mix Design Troubleshooting
7.7.1 Pumping and Blockage Problems
7.7.2 Shotcrete Not Sticking to Substrate
7.8 Drop Pipes
7.9 Vertical/Inclined Downgrade Pumping

8 **SHOTCRETE FINISHES**

8.1 Introduction
8.2 Types of Finish
8.3 Application Processes
8.4 Cracking
8.5 Durability

9 **SHOTCRETE EQUIPMENT**

9.1 Introduction
9.2 Dry-Mix Equipment
9.2.1 General
9.2.2 Single- and Double-Chamber Machines
9.2.3 Rotary Machines
9.3 Wet-Mix Shotcrete Pumps
9.4 Ancillary Equipment
9.4.1 Robotic Equipment
9.4.2 Accelerator Dosing Pumps
9.4.3 Nozzle Assembly
9.4.4 Shotcrete Delivery Hoses
9.4.5 Equipment Safety
9.4.6 Thickness Control

10 **BATCHING AND MIXING**

10.1 Batching of Wet-Mix Shotcrete
10.2 Batching of Dry-Mix Shotcrete
10.3 Mix Consistency
10.3.1 General
10.3.2 Fibres and Admixtures
10.3.3 Temperature at Batching

11 **DELIVERY**
- 11.1 General
- 11.2 Truck-Mounted Agitator
- 11.3 Slick Line or Drop Pipe
- 11.4 Pumping

12 **APPLICATION**
- 12.1 General
- 12.2 Services
  - 12.2.1 Power
  - 12.2.2 Water
  - 12.2.3 Lighting
  - 12.2.4 Ventilation
  - 12.2.5 Compressed Air
- 12.3 Training and Certification
- 12.4 Safety
  - 12.4.1 General
  - 12.4.2 Minimum Recommended Protective Equipment
- 12.5 Spraying
  - 12.5.1 Substrate and Surface Preparation
  - 12.5.2 Environmental Conditions
  - 12.5.3 Hand Spraying Procedure
  - 12.5.4 Joints
  - 12.5.5 Shotcreting Sequences
- 12.6 Mechanised Spraying
  - 12.6.1 Set up
  - 12.6.2 Scaling
  - 12.6.3 Spraying Procedure
  - 12.6.4 Cleaning the Machine
  - 12.6.5 Application by Specialised Methods
- 12.7 Curing

13 **PERFORMANCE REQUIREMENTS**
- 13.1 Quality Control
- 13.2 Pre-construction Trials
- 13.3 Frequency of Testing
- 13.4 Quality Systems
  - 13.4.1 General
  - 13.4.2 Quality Assurance Planning
  - 13.4.3 Records

14 **TEST METHODS**
- 14.1 Introduction
- 14.2 Slump
- 14.3 Spread
- 14.4 Flow table
- 14.5 Compressive Strength
- 14.6 Methods of Measuring Early-Age Compressive Strength
  - 14.6.1 General
  - 14.6.2 Soil Penetrometer
  - 14.6.3 Needle Penetrometers
  - 14.6.4 Beam-End Tester
  - 14.6.5 Hilti Gun-Test Method
- 14.7 Flexural Strength of Plain Shotcrete
- 14.8 Post-crack Performance Testing
  - 14.8.1 General
  - 14.8.2 Round-Panel Test Method – ASTM C1550
  - 14.8.3 Square-Panel Test Method – EN 14488-5
  - 14.8.4 Beam-Test Method – EN 14651
  - 14.8.5 Beam-Test Method – ASTM C-1609/C1609M
  - 14.8.6 Beam-Test Method – EN 14488-3 Beam
  - 14.8.7 Double Punch Test
- 14.9 Density
- 14.10 Drying Shrinkage
- 14.11 Creep
- 14.12 Coefficient of Thermal Expansion
- 14.13 Alkali-Silica Reactivity (ASR)
- 14.14 Soluble Salts
- 14.15 Water Penetration through Bulk Shotcrete
- 14.16 Bond Strength (Adhesion)
- 14.17 Freeze/Thaw Resistance
- 14.18 Determination of Fibre Content

15 **REFERENCES**

Australian/International Standards

TABLES

Table 1.1 Comparison of wet-mix and dry-mix processes for various aspects

Table 3.1 Typical prescribed performance properties for shotcrete in tunnel linings

Table 5.1 Typical target UCS ranges for recent Australian projects

Table 5.2 Typical toughness values specified in recent Australian mining projects

Table 5.3 Typical toughness values specified in recent Australian civil projects

Table 6.1 Accelerators for cast concrete and shotcrete

Table 7.1 Combined aggregate gradings for various specifications

Table 7.2 Typical wet-mix shotcrete mix designs for remotely controlled spraying in mining and civil tunnel projects

Table 7.3 Typical wet-mix shotcrete mix design for manual spraying

Table 7.4 Typical dry-mix shotcrete mix design

Table 7.5 Example aggregate fractures in a typical shotcrete mix

Table 7.6 Example calculation of combined grading for a shotcrete mix using materials listed in Table 7.5

Table 13.1 Recommended frequency of testing for civil tunnel and underground projects

Table 13.2 Recommended frequency of testing for mining applications

Table 13.3 Typical basic management plan

FIGURES

Figure 1.1 Shotcrete has many applications in tunnel construction

Figure 1.2 Structural shotcrete in tunnel applied with remotely controlled manipulator

Figure 1.3 Underground shotcreting in Sydney sandstone

Figure 1.4 In-cycle shotcreting for rapid excavation of underground tunnels

Figure 1.5 Ventilation shaft sprayed using dry-mix process

Figure 1.6 Aggregate silos constructed from shotcrete

Figure 1.7 Shotcrete applied to loadbearing basement walls

Figure 1.8 Top down basement construction employing structural shoring piles, a capping beam, ground anchors, and shotcrete walls

Figure 1.9 Shannon Creek Dam spillway walls

Figure 1.10 Channel surfaces at Whitewater Facility, Penrith, NSW

Figure 1.11 Preparation of embankment for stabilisation by shotcreting

Figure 1.12 Application of shotcrete for embankment stabilisation

Figure 1.13 Swimming pool construction with shotcrete

Figure 1.14 Dry-mix process used for repair of reinforced concrete arch

Figure 1.15 Shotcrete finished to resemble native rock

Figure 1.16 Shotcrete made to resemble sandstone in a garden

Figure 1.17 Drain constructed to divert stormwater from motorway

Figure 1.18 Culvert repair in progress

Figure 1.19 Culvert repair completed in shotcrete

Figure 1.20 Corroded steel culverts replaced in place with shotcreted linings and face

Figure 1.21 Bridge abutment produced using shotcrete

Figure 1.22 Shotcrete made to resemble cast wall on Sydney metro

Figure 1.23 Sprayed smoothing layer using gunite mixture prior to application of spray-on waterproofing layer

Figure 1.24 Rock slope stabilisation using shotcrete on Hinze Dam, Queensland

Figure 4.1 Ravelling of small wedges in a closely jointed rock mass. Shotcrete can provide effective support in such rock masses

Figure 4.2 Post-test condition of fibre and chain-link reinforced shotcrete panel (from Raffaldi et al., 2017)

Figure 4.3 Estimated Support Categories based on the Tunneling Quality Index, Q (after Grimstad & Barton, 1993)

Figure 4.4 In-cycle shotcreting example

Figure 7.1 Individual and combined grading curves for aggregates in example

Figure 7.2 Concrete flow sequence in a piston pump showing swing arm moving between piston inlets

Figure 7.3 Air loss during and after pumping, according to Dyer (1991)

Figure 8.1 Gun finish on natural ground surface

Figure 8.2 Normal gun finish

Figure 8.3 Wood float finish

Figure 8.4 Steel trowel finish in a culvert

Figure 8.5 Wood float and sponge finish

Figure 8.6 Patterned finish to suit nearby environment

Figure 8.7 Blockwork produced in shotcrete

Figure 8.8 Waterfront blockwork made with shotcrete

Figure 8.9 Coastal structures made in shotcrete to resemble sandstone blockwork

Figure 8.10 Simulated rock on roadside

Figure 8.11 Simulated “mock rock” in a bush setting

Figure 8.12 Pedestrian area with shotcrete to simulate pre-cast panels, wood float sponge finish with grooving

Figure 8.13 Repair of shotcrete that suffered cracking due to mix design issues

Figure 8.14 Crack control through jointing in a sprayed concrete spillway

Figure 9.1 Detail of single-chamber machine

Figure 9.2 Detail of single-chamber machine with feed wheel

Figure 9.3 Detail of rotary-barrel machine

Figure 9.4 Typical rotary-barrel machine

Figure 9.5 Detail of rotary-feed-bowl machine

Figure 9.6 Typical rotary-feed-bowl machine

Figure 9.7 Detail of positive-displacement piston-type wet-mix equipment

Figure 9.8 Detail of peristaltic-type (squeeze pump) wet-mix equipment

Figure 9.9 Detail of worm (mono) pump wet-mix equipment

Figure 9.10 Remote-controlled shotcreting rig for mining applications

Figure 9.11 Remote-controlled shotcreting rig for tunnel and infrastructure applications

Figure 9.12 Typical remote-controlled wet-mix nozzle assembly

Figure 9.13 Detail of typical wet-mix nozzle for remote-controlled applications

Figure 9.14 Typical hand-held wet-mix nozzles

Figure 9.15 Typical hand-held dry-mix nozzles

Figure 12.1 Personal protective clothing and equipment appropriate for a hand-spray nozzleman

Figure 12.2 Operator wearing an “air stream” helmet

Figure 12.3 Careful sequencing when spraying free-form shotcrete on earth surfaces, such as inground swimming pools, can prevent slippage

Figure 12.4 Circular shotcreting motion, and progress of shotcreting from ground up to minimise incorporation of rebound into works

Figure 12.5 Spraying should commence from the ground and move methodically upwards

Figure 12.6 The top edge should be maintained at not less than 45° to avoid rebound material contaminating the shotcrete

Figure 12.7 Recommended placement of reinforcing bars relative to substrate and other bars

Figure 12.8 Consequences of poor spraying practice for encapsulation of reinforcing bars

Figure 12.9 Conventional forms used as alignment control for encasement of an existing column with shotcrete

Figure 12.10 Two methods of anchoring reinforcement to a steel beam for encasement with shotcrete

Figure 12.11 Rebound can be limited by the skill of the nozzleman

Figure 12.12 Recommended Practice for Joints in Shotcreted Walls

Figure 12.13 Two methods of producing water-tight joints in shotcreted walls

Figure 12.14 Skilled operators can produce a high quality product in many varied circumstances.

Figure 12.15 Summarising the general process in a typical project. (a) begin spraying from the ground up, single-layer reinforcement preferred (b) topping-off, keep top surface at not less than 45° (c) establishing lines using spirit level (d) begin screeding to reference surface (e) complete screeding and floating (f) finish surface with a sponge

Figure 12.16(a) Formwork, steelwork and fittings ready for shotcreting

Figure 12.16(b) Spraying the walls from the bottom up

Figure 12.16(c) Cutting and screeding of walls following spraying

Figure 12.16(d) Cutting the walls and coping

Figure 12.16(e) Spraying the floor of the pool

Figure 12.16(f) Cutting and hand-sculpting the steps

Figure 12.17(a) Reinforcement in place prior to start of spraying

Figure 12.17(b) Spraying commences at base of each wall

Figure 12.17(c) Proceed to the top of each wall and cut to finish

Figure 12.17(d) Cut, screed, and float each wall, finish using steel trowel

Figure 12.17(e) Cast the base of the tank using the same shotcrete mix

Figure 12.17(f) The tank floor is completed using bull floats only

Figure 12.18 Examples of wet mix spraying machines

Figure 12.19 Examples of underground agitator trucks used in mines

Figure 12.20 Illustration of back angles and rebound areas common in tunnels

Figure 12.21 Remote shaft lining rig in construction yard

Figure 12.22 Remote shaft lining rig being used to spray inaccessible area

Figure 12.23 Shotcrete spray robot mounted on a large diameter TBM (top) and a spray boom mounted on a small diameter TBM (above)

Figure 14.1 Soil penetrometer in use

Figure 14.2 Needle penetrometer

Figure 14.3 Beam-end tester in use

Figure 14.4 Hilti DX 450 nail gun

Figure 14.5 ASTM C-1550 round panel test in servo controlled test rig

Figure 14.6 Examples of load-deflection curves obtained from ASTM C-1550 round panels reinforced with (a) steel fibres and (b) macro-synthetic fibres

Figure 14.7 Typical differences in load-deflection characteristics for shotcrete reinforced with steel mesh, steel fibres, and macro-synthetic fibres in ASTM C-1550 round panel test

Figure 14.8 EN 14488 panel test using square test panel

Figure 14.9 Example of load-deflection curves obtained from square EN 14488-5 panels reinforced with steel fibres

Figure 14.10 ASTM C-1609 beam test in progress

Figure 14.11 Pertinent features of EFNARC Bond test apparatus

Figure 14.12 Process of conducting bond test using Swedish Standard 137243

1 Introduction

1.1 SCOPE

This guide provides a description of the recommended technology and practice for shotcrete processes, materials, specifications and equipment. It suggests issues that require consideration with respect to structural design and mix design, but does not purport to be a comprehensive standard on design. While this guide provided an overview of processes involved in shotcreting and required performance criteria, it does not replace the need for specific expert knowledge in the particular fields discussed.

In writing this guide, the Australian Shotcrete Society has sought to encourage performance-based specifications as opposed to prescriptive specifications for shotcrete.

1.2 DEFINITIONS

It is generally accepted that the term "shotcrete" has been adopted in Australia for the description of sprayed concrete in accordance with the American Concrete Institute (ACI) conventions, and the term "shotcrete" will be used throughout this guide. In this document, the term "shotcrete" is defined as mortar or concrete conveyed through a hose and pneumatically projected at high velocity onto a surface or substrate.

Accelerator – a material that is normally added at the shotcrete nozzle having the primary effect of causing rapid stiffening, reducing slump and increasing the rate of hydration of the cement. The term activator is also used to denote a set accelerator. Accelerators normally used for shotcrete are chemically distinct from admixture accelerators.

Additive – pigments or oxides added to a cementitious mixture.

Adhesion/Bond – the property that quantifies the chemical and mechanical strength of the shotcrete sticking to the substrate.

Binder – all cementitious materials in a concrete mixture.

Bleeding – the movement of the water from within to the surface of the shotcrete resulting from the separation of water from the solid ingredients in the mix.

Blended cement – A hydraulic cement consisting of Portland cement and more than 7.5% of fly ash or GGBS or both, and up to and including 10% amorphous silica all uniformly mixed. The proportions are at the discretion of the cement manufacturer.

Build-up – the increase in thickness with successive passes of shotcrete.

Cement – (see *Hydraulic cement*, *General purpose cement* and *Blended cement*).

Chemical Admixture – a liquid or dispersible powder added deliberately to concrete before or during mixing to improve its economy and / or properties in the plastic and / or hardened state.

Cohesion – the extent to which the ingredients of mixed concrete, mortar or shotcrete remain homogeneously mixed when transported, handled, placed, pumped and / or sprayed. This term also refers to the extent to which particles in a mixture stick to each other.

Compaction – the process of reducing and ideally eliminating the entrapped air during placing of shotcrete through sufficient air pressure and proper spraying techniques.

Concrete – A mixture of cement, aggregates and water, with or without the addition of chemical admixtures, or other materials, in which the nominal maximum aggregate size is equal to or greater than 5 mm.

Curing – the process of maintaining freshly placed concrete or sprayed shotcrete in a moist condition and, where possible, at ideal temperature conditions to enhance and ideally facilitate complete hydration of hydraulic cement and the reactions of any pozzolanic materials to allow the potential properties of the mix to develop.

Delamination – loss of bond between a layer of shotcrete and either the substrate or previously applied shotcrete.

Dental Shotcrete – A layer of shotcrete applied to an over-excavated or broken substrate building it back up to the required design line.

Dry-mix Shotcrete – Shotcrete in which all the ingredients are conveyed in a dry state by compressed air to the nozzle, where water is added, and the resultant shotcrete is sprayed via compressed air.

Embrittlement – a phenomenon is afflicting FRS in which fibre bond strength increases to such a high

level with ageing of the concrete matrix that the mode of post-crack behaviour changes from a high-energy pull-out mode to a low-energy rupture mode. This leads to a loss of performance at relatively wide crack widths and therefore primarily affects strength limit state considerations.

Fall out – a substantial piece or slab of shotcrete that falls away from a sprayed surface some time after spraying. This is not to be confused with rebound that involves particles which bounce off the substrate or in-place shotcrete during the shotcreting process.

Fibres – slender reinforcing elements typically of high tensile capacity added to concrete. See *Macro fibres* and *Micro fibres*.

Flash coat – a thin shotcrete layer applied for sealing or bonding purposes.

FRS – Fibre Reinforced Shotcrete

General purpose cement – is a hydraulic cement containing a minimum of 92.5% Portland cement and a maximum 7.5% combination of mineral additions and / or minor additional constituents (5% maximum).

Gunite – the brand name given by the Cement Gun Company in 1907 in the USA to the first mortar that was sprayed. This mortar contained fine aggregate and a high percentage of cement. The term Gunite is not generally used in Australia.

Hydration – the chemical reaction of hydraulic cement with water during which compounds exhibiting mechanical strength are formed.

Hydraulic cement – a binding material that sets and hardens by chemical reaction with water and is capable of doing so underwater. The most common form of hydraulic cement is general purpose (GP) cement.

Mortar – as for *Concrete* except "the maximum nominal aggregate size is less than 5 mm".

Macro fibres – relatively large fibres normally used to develop structural levels of performance after cracking of the concrete matrix.

Micro fibres – relatively small diameter fibres, usually less than 0.3 mm diameter, used for control of plastic shrinkage cracking and rebound.

Micro-synthetic monofilament polypropylene fibres – very small diameter fibres made of polypropylene used to control explosive spalling in high temperature exposure.

Nozzle/gun finish – the undisturbed finish of shotcrete as applied from the nozzle.

Nozzleman – the person charged with control of the nozzle and therefore the spraying of the concrete. The term "sprayer" is used in place of "nozzleman" in this document.

Overspray – shotcrete inadvertently deposited on areas surrounding the intended surface.

Over-thickness – extra shotcrete build-up deposited in excess of the intended thickness.

Pass – movement of the nozzle over an area of application during shotcreting (a layer of shotcrete is built up by making several passes).

Paste – a combination of the finely divided solid material that passes the 300 micron sieve (0.03 mm), plus available fluids, in the concrete mix.

Post-crack performance – either the energy absorption or residual strength of a fibre reinforced concrete material or element.

Pozzolan – a material consisting mainly of silicates that together with lime and water forms compounds possessing cementitious properties.

Performance based specification – a specification in which the performance characteristics required of the shotcrete are specified (e.g. compressive strength at a particular age of the shotcrete, flexural strength, toughness, relative density, etc).

Permanent lining – shotcrete that is required to satisfy serviceability and strength performance requirements over the design life of the entire structure. This design life is typically 50–120 years depending on the type of structure.

Prescriptive specification – a specification where the nature and/or the quantity of some or all of the shotcrete ingredients and the process by which the shotcrete is produced and applied are specified (e.g. cement content, etc).

Primary Lining – a shotcrete lining installed as part of the initial tunnel excavation and support cycle in accordance with the relevant requirements shown on the relevant Design Drawings.

Pulsing – pulsating or intermittent flow of shotcrete material through the delivery line.

Rebound – that part of the shotcrete which ricochets away from the intended surface during the spraying process. Rebound consists mainly of larger aggregate particles, and to a lesser extent, fibres, binder and water.

Residual strength – the flexural or tensile strength of a fibre reinforced concrete after cracking of the matrix.

Sand lens/pocket – a zone within the shotcrete containing unmixed fine aggregate with little or no cement, resulting from inadequate mixing of the delivered concrete.

Sagging or sloughing – downward movement of the shotcrete from its initial and required point of application.

Segregation – separation of aggregate particles from the paste prior to spraying.

Saturated Surface Dry (SSD) – condition of an aggregate when the permeable pores are filled with water and no water is on the exposed surface.

Sacrificial Layer – a layer which is not considered to contribute to the structural resistance of a lining in the permanent case due to an effective section loss in the surface zone caused by the corrosion of steel fibres or loss of concrete during a fire.

Secondary lining – a tunnel lining installed independent of the excavation and support cycle, e.g. to supplement the lining thickness in areas where embedded steel elements cannot be considered to contribute to the permanent support, and/or, shotcrete lining installed after a waterproofing membrane has been placed.

Serviceability Limit State (SLS) – A limit state is a condition of a structure beyond which it no longer fulfils the relevant design criteria. The serviceability limit state is exceeded for a structure if it fails to meet performance requirements for use under service loads even though it may satisfy strength-related performance requirements and thereby avoid collapse. A shotcrete structure is generally deemed to satisfy the serviceability limit state when the constituent elements satisfy limits on maximum allowable stress, deformation, and crack width in response to service loads.

Smoothing layer – a thin layer of shotcrete (or mortar) usually intended to provide a more uniform and smoother surface generally applied over a layer of shotcrete.

Sprayer – the person charged with control of the nozzle and therefore the spraying of the shotcrete.

Substrate – The surface on to which the shotcrete is sprayed.

Supplementary cementitious materials (SCM) – primarily silicate-based materials that contribute to the binding properties of hardened concrete through hydraulic or pozzolanic activity. Typical examples are fly ashes, GGBS (ground, granulated blast-furnace slag), and silica fume.

Temporary lining – a shotcrete lining that is required to satisfy strength performance requirements over the anticipated construction time for a structure. This anticipated construction time is typically 1–5 years. Serviceability limits are normally not applied to temporary shotcrete.

Toughness – Post-crack performance of fibre reinforced shotcrete defined as post-crack energy absorption of a test specimen.

Ultimate Limit State (ULS) – the ultimate limit state for a structure is exceeded if it fails to satisfy strength-related performance requirements in response to design loads and is therefore at risk of collapse. A structure is deemed to satisfy ultimate limit state criteria if all factored bending, shear and tensile or compressive stresses are less than the factored resistance calculated for all sections under consideration.

Water/cement ratio – the ratio of the mass of water, exclusive of that absorbed by the aggregate, to the mass of cement in a mixture, stated as a decimal, and abbreviated as w/c.

Water/binder ratio – the ratio of the mass of water, exclusive of that absorbed by the aggregates, to the mass of all binding materials comprising cement and supplementary cementitious materials.

Water-proofing membrane – a spray applied or sheet membrane included with a shotcrete lining to reduce the penetration of water.

Wet-mix shotcrete – shotcrete in which all of the ingredients, including the mixing water, are mixed before being pumped into the delivery line and sprayed.

1.3 TYPES OF SHOTCRETE

There are two types of shotcrete processes, as described below.

Wet-mix Shotcrete Process

This is a technique in which cement, aggregate, and water are batched and mixed together prior to being delivered into a pump and conveyed through a hose to a nozzle where it is pneumatically projected onto a surface. Compressed air is introduced to the material flow at the nozzle in order to project the material toward the substrate. Wet shotcrete normally incorporates admixtures and may also include fibres.

Dry-mix Shotcrete Process

This is a technique in which cement and aggregates are batched, mixed and delivered into a purpose-made machine wherein the materials are pneumatically conveyed through hoses or pipes to a nozzle where water is introduced to wet the mixture before it is projected pneumatically into place. The shotcrete may also include admixtures or fibres or a combination of both.

Table 1.1 describes the characteristics of the two processes. It is generally accepted that within Australia the majority of shotcrete is applied by the wet–mix method, however certain applications are more suitable for dry-mix (see Table 1.1).

1.4 USES FOR SHOTCRETE

1.4.1 General

Shotcrete plays an essential role in today's building industry, civil construction and mining industries. It is an extremely versatile material that can be easily and rapidly applied to provide a cost-effective means of construction. Shotcrete is an efficient way of placing concrete and forms an excellent bond to a number of substrates including rock, concrete, masonry and steel. It is suited to a wide range of ground-support applications, linings, and building structures.

The main advantages of shotcrete over conventionally placed concrete are:

- Placement and compaction are carried out as one operation.
- Formwork is generally eliminated.
- The process of placement can be quicker in most projects.

Following application and an initial period of hydration, shotcrete provides early passive support

Table 1.1: *Comparison of wet-mix and dry-mix processes for various aspects*

Aspect	Wet-mix	Dry-mix
Equipment	Lower maintenance cost. Higher capital cost.	Higher maintenance cost. Lower capital cost.
Mixing	Accurate mixing at the batch plant. Can utilise bulk premix. Wet aggregates acceptable.	Mixing at jobsite, at the batch plant, or premixed and delivered either in bags or in an agitator truck. Performance impaired by wet aggregates. Range limited to max 6% moisture content. More labour intensive.
Output	Moderate to high placement rate. Higher than similar dry mix machines (3 to 10 m^3/hr for the hand-held nozzle, up to 25 m^3/hr for remotely-controlled shotcrete equipment).	Low to moderate placement rate (1–5 m^3/hr)
Rebound	Low rebound, typically between 5 to 15% depending on mix design and application.	Generally higher rebound than wet (up to 30%) depending on site conditions and applicator.
Dust	Low dust generated.	Notably higher dust generated.
In-place quality	Consistent quality.	Potentially higher variability in placed quality.
Conveyance through a delivery hose	Lower transport distance e.g. max 200 m with special lines and mixes.	High transport distance e.g. max 500 m with special equipment.
Applications	Better suited to high application volumes.	Better suited to low application volumes and stop/start operations. Suitable for remote & limited access locations where batching and delivery of concrete is difficult.

to the ground. As the shotcrete gains strength, it generates a significant resistance to any subsequent deformation of the rock mass, thus becoming an active support. Shotcrete that has been properly designed and correctly applied will not sag, even when the application is vertical or overhead. It is especially suited to areas with restricted access by the use of small portable or mobile equipment. Shotcrete is either applied using remotely controlled or hand-operated equipment. Remotely controlled equipment is generally used in underground applications to allow safe operation by the nozzleman away from the unsupported area. These advantages have resulted in shotcrete being used for a variety of applications, some of which are listed below, grouped in general areas of application.



Figure 1.1: *Shotcrete has many applications in tunnel construction*

1.4.2 **Tunnelling**

In tunnelling, shotcrete can be used either for the final lining or as temporary support as the tunnel is advanced. Final linings of fibre-reinforced shotcrete can be in the form of a Single Pass Tunnel Lining (SPTL) using a combination of rock bolts, cable bolts, fibre-reinforced shotcrete, and steel arches (where additional support is required). Shotcrete thicknesses can vary from 50 mm to 500 mm, and can be applied in several layers (Figure 1.2). Shotcrete applied as temporary support should be designed to provide early structural support. This can be followed later by a second layer to provide permanent support. The permanent support lining may take the form of shotcrete, precast concrete segments, or cast in place concrete.

As shotcrete technology has developed and waterproofing systems improved, SPTL has become



Figure 1.2: *Structural shotcrete in tunnel applied with a remotely controlled manipulator*



Figure 1.3: *Underground shotcreting in Sydney sandstone*

a significant method of ground support for civil tunnel construction (Figure 1.3). Refer to Chapter 3 for more discussion on tunnelling. Thin unreinforced shotcrete linings can also be applied to smooth the rock surface and hence reduce resistance to air-flow.

1.4.3 **Caverns**

Underground caverns for storage of commodities and materials such as oil, gas, effluent and nuclear waste have been built with the use of permanent shotcrete linings, e.g. the Elgas gas caverns and North Side Storage Tunnel – both in Sydney.

1.4.4 **Ground Support in Mining**

Mechanised application of shotcrete in Australian mines first occurred in 1994. Initially, shotcrete was applied over installed mesh and bolts in areas of bad ground where mesh alone was inadequate. However, FRS progressively replaced mesh as the preferred method of ground support in underground mines during the 1990s due to the following reasons:

1. The effectiveness of ground support achieved with FRS and post-bolting significantly exceeded the effectiveness of ground support achieved with bolts and mesh.
2. Increased safety achieved by not exposing personnel to unsupported ground.
3. The speed of mining development improved using shotcrete.
4. The proportion of rehabilitation of ground support was reduced significantly.
5. The increased availability of mechanised spraying equipment and reduced labour requirements in the ground support process.

One of the key developments that improved the efficiency of using shotcrete for ground support was the move to in-cycle shotcreting. In this process the shotcrete was applied during the development cycle, after blasting and before the installation of rock bolts (Figure 1.4). In this way, the use of mesh was not required and the bolts were installed through the shotcrete layer. This method resulted in the bolt plates being installed over the shotcrete layer, providing a superior load transfer connection between the shotcrete layer and the ground.

Installing the shotcrete during the development cycle demanded that the shotcrete achieve substantial early age strength as soon as possible after application to allow the safe re-entry of personnel to continue development. The required early strength must be determined by the mining engineer on each site but is generally in the order of 1.0 MPa. This can normally be achieved in 3-4 hours after spraying. Test methods suitable for assessing this are outlined in Chapter 14.



Figure 1.4: *In-cycle shotcreting for rapid excavation of underground tunnels*

Another development that has enhanced the performance of shotcrete for ground support is hydro-scaling. High pressure water washing at pressures between 3000 and 6000 psi has been shown to improve bonding to the substrate by up to 300%. In most cases there is no need for the drilling jumbo to carry out any scaling of the blasted ground. More details on hydro-scaling are contained in Chapter 12. The effectiveness of the shotcrete layer for ground support can be improved by increasing the thickness of the applied layer and/or by increasing the fibre dose. Hence one application system can cope with many different design requirements (Figure 1.5).

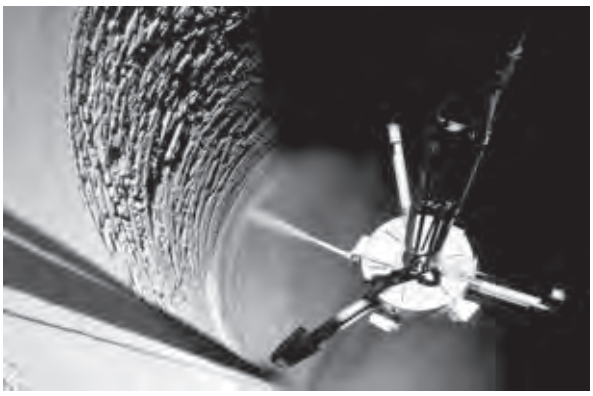

Figure 1.5: *Ventilation shaft sprayed using the dry-mix process*

In areas that are seismically active it is common practice to place a layer of un-encased mesh fixed with rock bolts over the final shotcrete layer. When a seismic event occurs there is a release of energy producing seismic waves that radiate outwards, these waves travel through the rock and when the magnitude of the peak particle velocity exceeds the resistance of the shotcrete they can force the shotcrete as well as the fractured rock behind the shotcrete into the excavation. The ductility of un-encased mesh can greatly reduce the damage. It should be noted that by encasing the mesh it not only reduces the ductility of the mesh but the encasing becomes a potential projectile further endangering any person or equipment in the tunnel at the time. Today the vast majority of underground mines in Australia use shotcrete for ground support.

1.4.5 **Commercial Buildings**

Shotcrete has a history of application in the construction of buildings. Typical shotcrete applications include underground load bearing elements and above ground load bearing elements within multi-storey structures. Other examples are perimeter lateral stability elements and internal load bearing walls to reduce the amount of traditional columns in a structure. Shotcrete has been used as an alternative to cast tilt-up panel construction for portal-framed structures and aggregate silos, Figure 1.6.



Figure 1.6: *Aggregate silos constructed from shotcrete*

1.4.6 **Ground Excavation for Basements and Car Parks**

Shotcrete plays an important role in ground support for excavations, where “boundary to boundary” or vertical cuts are required (Figure 1.7). Coupled with soil nails or piles & anchors, top down construction is achieved as excavation proceeds delivering the in-place permanent basement walls upon conclusion of the excavation to the finished floor level (Figure 1.8).



Figure 1.7: *Shotcrete applied to loadbearing basement walls*



Figure 1.8: *Top down basement construction employing structural shoring piles, a capping beam, ground anchors, and shotcrete walls*

1.4.7 **Backfill of Subsidence or over Excavated Surfaces**

Shotcrete can be effectively used to backfill areas of over-excavation or subsidence. Traditional methods such as one-sided formwork could require personnel to be exposed to dangerous conditions as well as presenting logistical difficulties for access and construction.



Figure 1.9: *Shannon Creek Dam spillway walls*

One example is the Shannon Creek Dam spillway walls (completed September 2008, Figure 1.9). The dam walls were steeply inclined and up to 11 m high. The specification for the formed and poured walls was replaced by an alternative shotcrete design. Overbreak was prevalent due to unavoidable ground conditions & challenging excavation angles. Coupled with a double layer of reinforcement this made quality compacted shotcrete application difficult. To solve this, a shotcrete blinding layer was applied to bring the substrate back to line. The reinforcement was then installed and the shotcrete applied and finished with excellent compaction, increased productivity and reduced cost.

1.4.8 **Complex Civil Structures**

Shotcrete is highly suited to structures involving complex geometry, including curved or folded sections. Typical applications include the construction of lightweight roofs, theme parks, zoos.



Figure 1.10: *Channel surfaces at Whitewater Facility, Penrith, NSW*

1.4.9 **Channels/Reservoirs and Spillways**

Reservoirs and channels can be constructed by excavating the shape required and shotcreting free-form directly onto the exposed rock or earth. Shotcrete has the ability to be placed, compacted & finished (possibly in one pass) in instances requiring high access, free form or very thick linings. Examples are the Olympic Whitewater Stadium Channel in Sydney (Figure 1.10) and Shannon Creek Dam Spillway in Grafton NSW.

1.4.10 **Embankment Stabilisation**

Shotcrete is widely used for the stabilisation and protection of surface rock and earth. The surface is protected against deterioration by filling in uneven parts and sealing the entire surface. Due to its high shear strength and good bond to rock, shotcrete stabilises loose rock by filling gaps and cracks and thereby prevents loose pieces of rock from falling out. This can prevent progressive surface failure (Figures 1.11 and 1.12). Shotcrete is most effective when used in conjunction with rock or soil anchors.



Figure 1.11: *Preparation of embankment for stabilisation by shotcreting*



Figure 1.12: *Application of shotcrete for embankment stabilisation*

1.4.11 **Swimming Pools and Skateboard Parks**

These recreational structures are good examples of free-form construction using shotcrete. Both pools and skateboard parks are constructed by excavating a hole in the ground to the required shape, fixing a top board to form the rim, positioning the necessary reinforcement, and shotcreting the structure. Constructions of this type are economical, strong, rigid, and durable (Figure 1.13).



Figure 1.13: *Swimming pool construction with shotcrete*

1.4.12 **Refractories**

Furnaces of all types can be lined or repaired with special blends of shotcrete containing materials such as high-alumina cements and crushed firebricks, which possess enhanced refractory properties. One of the main advantages of refractory shotcrete is that it can be placed quickly and in large volumes in almost inaccessible areas, for example, at height inside chimneys or in remote parts of large furnaces.

1.4.13 **Repair, Restoration and Strengthening**

Shotcrete is widely used for the reinstatement of damaged structures. Repair of deteriorated concrete caused by corrosion or spalling, and concrete damaged by fire, are typical applications. Repair and restoration can only take place after the affected areas have been properly identified and prepared. Structures suitable for repair using shotcrete may include bridges, culverts, sewers, dams, towers, ports, buildings, and steel structures (Figure 1.14). Existing concrete structures can be strengthened with shotcrete where parts of the original concrete, for example, may need to be partially cut out and replaced due to honeycombing. Shotcrete can also be used when a structural element needs to be increased in size for the purpose of increasing load capacity. Structural elements that can be strengthened by this means include beams, columns, slabs, masonry walls, tanks, and pipes.



Figure 1.14: *Dry-mix process used for repair of reinforced concrete arch*

1.4.14 **Fire Proofing**

The use of shotcrete as a fireproofing material is common, especially in chemical plants and oil refineries. This process can involve the encasement of steelwork or an increase in thickness of cover concrete using shotcrete. Moreover, shotcrete can be designed to incorporate polypropylene micro fibres to minimise spalling under extreme heat conditions. High temperatures melt the micro fibres allowing water vapour to travel through the voids that were thereby formed and dissipate to the surface, hence minimising internal pressure build up and subsequent spalling.

1.4.15 **Decorative Finishes**

Shotcrete is most economically applied as a free-form material with an as-placed finish. Smooth surfaces, sharp edges and the like can be provided but they can be costly to produce and rely strongly on on-site workmanship. Natural-look finishes, such as the blocky sandstone of Sydney can also be achieved (Figure 1.15 and Figure 1.16). When finishing coats are applied, they can be sprayed and carved over various existing structures. They can also be coloured to match the surrounding areas. Shotcrete finishes are described in Chapter 8.



Figure 1.15: *Shotcrete finished to resemble native rock*



Figure 1.16: *Shotcrete made to resemble sandstone in a garden*

1.4.16 **Explosion-Proof Structures**

Shotcrete has been used by the military to construct bomb-proof hangars and installations. Many other organisations have used specialised shotcreting materials to construct installations that are designed to withstand explosions, particularly for security-critical buildings or hazardous areas (e.g. oil & gas refineries).

1.4.17 **Drainage Culverts and Lined Drains**

Shotcrete is an excellent solution for re-lining of damaged culverts. Steel corrugated tubes have generally been used to construct many culverts throughout Australia, but their design life can be comprised by excessive external loads and or deleterious water quality which can rust out the base.

Forming these structures can be cost and time prohibitive, especially when the culvert is unaligned. Shotcrete can be applied swiftly, spraying and finishing the floor and walls to allow free flow of water and finally the roof is sprayed overhead with the use of accelerator and left as a natural gun finish (Figures 1.17 to 1.20).



Figure 1.17: *Drain constructed to divert stormwater from motorway*



Figure 1.18: *Culvert repair in progress*



Figure 1.19: *Culvert repair completed in shotcrete*

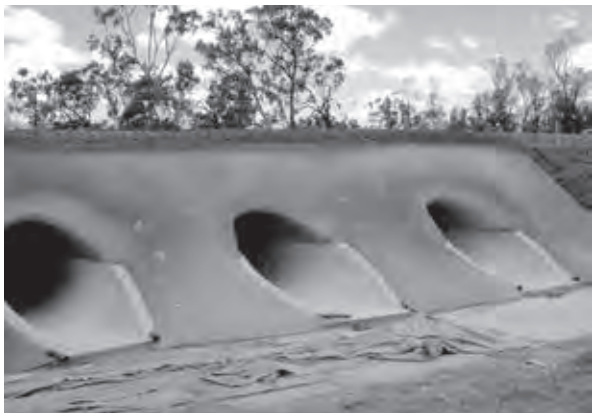

Figure 1.20: *Corroded steel culverts replaced in place with shotcreted linings and face*

1.4.18 **Bridge Abutments and Drainage Walls**

Concrete Bridge abutments or Deflection walls can be extremely challenging to construct with conventional formwork for cast in-situ concrete. Height, access and securing and positioning formwork (which is generally one-sided) required to place the concrete can, depending on the project, be almost impossible and generally impractical.

Shotcrete offers substantial cost and time savings and can be applied at almost any height, angle or thickness and negates the use of the installation and removal of formwork shutters in this regard (Figure 1.21). The following pictures demonstrate shotcrete's versatility and advantages for both of these applications.





Figure 1.21: *Bridge abutment produced using shotcrete*

1.4.19 **Matching or Replacing Concrete Elements**

The architectural versatility of shotcrete means that it can readily be made to match the appearance of cast concrete. An example of this is the replication of pre-cast concrete panels by employing the shotcrete that is required for excavated ground support, negating the need for secondary panels.

The North West Rail Link infrastructure project in north-west Sydney required large areas of walls to be stabilised during excavation employing soil nails coupled with structural shotcrete walls. The shotcrete was installed in top-down construction and, by cutting, finishing and installing specific jointing, the contractor was able to emulate the appearance and thus preclude and match exact pre-cast panels required for the Reinforced Earth bridge abutments (Figure 1.22). Time and cost savings were substantial as no secondary work involving transport, cranes, labour, and the panels themselves were required.



Figure 1.22: *Shotcrete made to resemble cast wall on Sydney metro*

1.4.20 **Smoothing Layers**

Wet or dry shotcrete can be applied as a non-structural smoothing layer for many reasons:

- To fill voids where required.
- To improve airflow in air plenums.
- To reduce quantities of sprayed membrane required for waterproofing.
- To overcome puncturing or damage to either sprayed or sheet membranes due to the presence of protruding fibres in the structural shotcrete mix.

As an example, initial shotcrete layers required for tunnel roof support are often rough and dimpled due to their aggregate size coupled with a gun finish. Where waterproof membranes are specified to be sprayed over the initial lining they require only a thin layer typically 4–6 mm. Without a smoothing layer containing fine aggregates membrane wastage is excessive and costly (Figure 1.23)



Figure 1.23: *Sprayed smoothing layer using gunite mixture prior to application of spray-on waterproofing layer*

1.5 HISTORY

The first milestone in the history of shotcrete occurred in 1907 when a machine was invented by Carl Ethan Akeley in the USA (Yoggy, 2000). This machine allowed dry materials to be placed pneumatically with the addition of water at the nozzle. In 1910, a double chambered cement gun, based on the design by Akeley, was introduced into the construction industry. "Gunite", consisting essentially of sprayed mortar, was used in the USA in the 1920s to fireproof mine drifts. The early 1930s saw the generic term "shotcrete" introduced by the American Railway Engineering Association to describe the Gunite process. In 1966, the American Concrete Institute (ACI) adopted the term shotcrete for all pneumatically applied mortar and concrete involving both the dry-mix and the wet-mix processes. The European Union terminology for the same material is "sprayed concrete". In the 1940s coarse aggregate (10 mm minus) was introduced into sprayed concrete mixes. The wet shotcrete process was introduced in 1955. In the late 1960s remote-controlled shotcrete equipment was introduced. Steel fibres were first introduced in 1971 in North America, and in 1977 the Norwegians introduced steel fibres in combination with remotely controlled application on a large scale.

Shotcrete was first reported used in Australia in the mid-1950s in such applications as slope stabilisation, refractory linings, etc. Shotcrete was used in several tunnels as part of the Snowy Mountains Hydro Scheme including the Island Bend and Geehi pressure tunnels constructed in the early 1960s. Swimming pools were first constructed using shotcrete in the 1960s. In 1980, Sandy Hollow Rail Tunnel in NSW was lined using steel-fibre reinforced wet shotcrete. Prior to 1994, only a very small amount of dry-spray shotcrete was used in underground mines. Since then, the increase in the use of wet-mix fibre-reinforced shotcrete has been extremely rapid. In 2018 around 500,000 m^3 was used annually for underground construction in tunnels and mines, and around 300,000 m^3 in civil basements, pools, embankments, etc. In 2014, shotcrete use increased substantially in underground coal mines and now forms a major part of ground, methane, and dust control in this environment.



Figure 1.24: *Rock slope stabilisation using shotcrete on Hinze Dam, Queensland*

Major infrastructure projects in Australia that have used shotcrete in their construction include North West Rail Link, WestConnex, New M5, Northconnex, North Strathfield Rail Underpass, St Helena Tunnel (T2E), Sydney Metro Rail Tunnel, Melbourne Metro Rail Project, WestGate Road Tunnel Project, Forrestfield

Airport Link Project Perth, T2T, Adelaide Hospital, Darlington Upgrade, Super Highway, Torrens Rail, South East freeway, Northern Corridor, Goodwood intersection Sydney Airport Rail Link, Sydney Eastern Distributor, Melbourne City Link, Vulture St Brisbane, Crafers Tunnel South Australia, Sydney M5 East Motorway, M2 Motorway Sydney, Epping to Chatswood Rail Line, Lane Cove Tunnel, Cross City Tunnel in Sydney, Clem Jones Tunnel, Airport Link Tunnel, Boggo Road Busway Brisbane, Tugun Bypass Queensland, Brunswick to Yelghun Highway NSW, Mount Conjola road Deviation, East Link Project Melbourne, Cronulla Rail line Duplication and Shannon Creek Dam Grafton NSW. Shotcrete has also been widely used to construct swimming pools, facilitate slope stabilisation-retaining structures and for various architectural work. Repair and remediation is a relatively small-scale application for shotcrete in Australia.

2

Design of Above-Ground Structures Made with Shotcrete

The overall approach to the design of above-ground shotcrete structures resembles the approach used for conventional concrete structures and involves consideration of stability, strength, serviceability, durability, appearance, fire resistance and other design requirements. At present, structures made with shotcrete are not explicitly covered by AS 3600, AS 3735 or AS 5100, but they are covered by ACI 318 (2019 version). Aspects of shotcrete use in above-ground structures described in ACI 318 can provide guidance to its use in Australia.

2.1 DESIGN CONSIDERATIONS FOR BASIC PROPERTIES

2.1.1 Design for Stability

Design of shotcrete structures for stability should consider overturning, uplift, buckling, or sliding of the structure as a rigid body. Overturning is primarily relevant to free-standing shotcrete structures (e.g. elevated silos). Uplift (or floatation) is primarily relevant to within-ground structures subject to hydraulic pressure (e.g. empty swimming pools). Sliding is primarily relevant to shotcrete structures subjected to a horizontal load component (e.g. basement wall). Some structures may be subject to a combination of instabilities such as retaining walls subject to overturning and sliding. In the design of shotcrete elements for stability in a building structure, the elements can be assumed to behave like a conventional reinforced concrete structure. A comprehensive structural specification must be prepared, and strict quality control must be deployed, to achieve the same. Refer to AS 3600 for the definition of a structural wall.

2.1.2 Design for Strength

The intended use of shotcrete will determine the performance requirements that the shotcrete must achieve. This can vary from a full structural support role through to non-loadbearing uses such as a superficial sealing layer or architectural/aesthetic feature. This clause covers design for the strength of load-bearing shotcrete.

It must be appreciated that interactions between shotcrete and the loads and materials it supports can be very complex and in many cases are presently incapable of being satisfactorily modelled or analysed. For this reason, various simplified analytical methods or empirical approaches to design for strength have been developed. However, the common aim of all design methods is to achieve a load resistance that exceeds the potential imposed load actions by a suitable margin.

The two approaches to strength design are analytical and empirical. The analytical approach involves a rationalisation of potential load actions and the corresponding load resistance of the structural system. The empirical approach involves the use of a documented body of past experience relevant to the specific application and prevailing conditions to derive a satisfactory structural system.

In applications involving shotcrete interaction with ground, due to the complexity of structural behaviour and the potentially high level of variability in design parameters, it is good practice to monitor the performance of a shotcrete-based structural system until satisfactory performance has been confirmed. Where adhesion to the substrate is required as part of a structural system, the potential for loss of adhesion is reduced by suitable substrate preparation and by limiting shrinkage and creep. In general, it is not recommended that adhesion between shotcrete and a substrate consisting of either hard or soft ground be relied upon in the long term for structural capacity. A long-term connection between lining and substrate can be provided separately through the use of anchoring systems.

It cannot be emphasised too strongly that where shotcrete is to be used for structural purposes a competent and qualified engineer who is experienced in this type of work should be engaged to carry out the necessary structural design. For the purposes of structural design in civil applications, codes such as AS 3600 and AS 5100 can be used for Ultimate Limit State (ULS) calculations when designing structures comprised of plain shotcrete or shotcrete reinforced with conventional bar reinforcement despite the fact that shotcrete is not specifically mentioned in these standards. Guidance on the placement of bars can be found in ACI 318 (2019) and ACI 506. When fibres are used as reinforcement than a structural analysis incorporating post-crack residual strengths at appropriate levels of deflection are recommended.

Basic guidance on FRS design can be found in the *fib* Model Code 2010. Substantial deflections must be assumed at the ULS to account for extreme events hence the post-crack performance of FRS must be considered at large crack widths (>3 mm). Performance data for FRS is obtained from tests as described in Section 14.

One of the most contentious and frequently disputed issues related to the use of shotcrete in conventionally reinforced structures is the magnitude of compressive strength to use in structural calculations. The strength of shotcrete in such structures cannot be based on the unconfined compressive strength (UCS) of cylinders cast using concrete delivered to site. Instead, the strength must be based on either core extracted from the works or, more commonly, extracted from panels sprayed adjacent to the works. AS 3600 does not explicitly cover shotcrete, but Appendix B, Section B6 covers estimation of the compressive strength of cast concrete based on cores extracted from a structure. In the absence of explicit consideration of shotcrete, the method of estimating UCS based on cores should be taken as valid for shotcrete. According to this clause in AS 3600, the design compressive strength can be taken as 1.15 times the mean measured compressive strength based on a minimum of three cores. This is similar in outcome to the directive in ACI 318 (2019) Section 26.12.4, in which the compressive strength shall be taken as f'_c "if the average compressive strength of three cores from a single test panel is not less than 0.85 f'_c, with no core having a strength less than 0.75 f'_c". Hence the design strength should be taken as 1/0.85 = 1.17 times the mean compressive strength. The cores used must have a diameter of at least 75 mm.

2.1.3 **Design for Serviceability**

Serviceability describes the ability of a structure to remain suitable for its intended purpose over its design life under service loads and conditions. In conjunction with considerations of load resistance, the design of shotcrete structures may have to satisfy serviceability criteria such as limits on deflections and crack widths. Other serviceability criteria commonly applied to shotcrete structures include water-tightness, settlement of supported ground, appearance, surface finish, and abrasion resistance. Deflections and crack widths assumed for Serviceability Limit State (SLS) design are generally much smaller than assumed for the ULS. Acceptable crack widths are generally taken to be no more than 0.3 mm in non-aggressive environments (AS 3600). The Model Code recommends maximum allowable crack widths as small as 0.15 mm for steel bar or fibre reinforced shotcrete in aggressive environments.

Water-tightness may require limiting crack widths to 0.10 mm in accordance with AS 3735. Given the impact that allowable crack widths may have on the design approach, the designer and client need to agree on allowable crack widths.

2.1.4 **Design for Appearance**

Appearance is often an important consideration for above-ground shotcrete structures. The appearance of shotcrete structures is strongly dependent on the surface finish and geometrical design. Surface finishes are covered in Chapter 8.

2.1.5 **Design for Durability**

Durability describes the ability of a structure to resist the environmental exposure conditions likely to occur during its intended life without the need for undue maintenance. These environmental exposure conditions may lead to chemical attack of the concrete matrix and corrosion of the reinforcement. Durability requirements for the shotcrete matrix are generally satisfied by controlling the mix design of the concrete matrix through such measures as limiting the maximum water/binder ratio or limiting the total content of calcium aluminate depending on the exposure conditions expected (see AS 3600). Durability requirements for steel reinforcement are normally satisfied by limiting in-service crack widths to 0.3 mm in normal exposure environments, providing an appropriate minimum cover thickness to the bars, and by ensuring the concrete matrix meets AS 3600 requirements for the appropriate exposure class. Crack width limits for more severe exposure conditions are generally in the range 0.15–0.20 mm, and minimum cover requirements are also more stringent (for example, in coastal environments). Maximum acceptable in-service crack widths for shotcrete reinforced with synthetic reinforcement may be much larger than is appropriate for steel reinforcement. The durability of a shotcrete matrix is generally good on account of the low water/binder ratio, high cement content, and common inclusion of SCMs.

The durability of concrete structures is a complex issue that will involve interactions of elements of the structure and the environment and these interactions may have to be addressed in conjunction with a suitably-qualified expert. Typical issues that influence design for durability include the specified design life (e.g. 20, 50, or 100 years) and exposure to the aggressive elements within the environment (e.g. involving groundwater chemistry, freeze/thaw conditions, contaminated ground, stray currents, etc.). Specialist consultants familiar with issues of concrete durability and corrosion of reinforcement should be consulted to develop suitable designs when shotcrete structures are expected to encounter aggressive exposure conditions (such as coastal defence).

2.1.6 Design for Fire Resistance

Certain applications for shotcrete may include requirements stipulated in the Building Code of Australia, or by the client, for resistance to fire over a prescribed minimum period of time. This requirement typically takes the form of resistance to critical loss of strength, serviceability, or the transmission of heat and/or smoke. For above-ground structures, the exposure conditions that a structure must survive are commonly those described in ISO 834. When appropriate, fire tests may have to be carried out to verify that the nominated fire-resistance level will be achieved. The CSIRO laboratory at North Ryde, Sydney, and Victoria University (Werribee Campus) in Melbourne are presently the only facilities in Australia where fire tests can be performed on shotcrete panels. Western Sydney University has the capacity to fire test shotcrete beams and cylinders.

2.1.7 Design for Other Requirements

Certain applications may require consideration of other criteria in design not included in the above categories, as they may affect the characteristics of the shotcrete required. Typical issues that may arise in an above-ground civil environment include, but are not limited to: restrictions relating to construction hours, and provisions for support and embedment for mechanical and electrical fixings. In applications where the shotcrete is subjected to wear and tear from water and rock flows, the abrasion and impact resistant properties may need to be enhanced through the use of higher-toughness shotcrete or through the addition of specialised materials such as corundum.

2.1.8 Design Considerations for the Shotcrete Matrix

The principal design criteria with respect to the shotcrete matrix are strength gain with time, shrinkage, creep, water permeability and durability. Less commonly considered design criteria can include density, elastic modulus, abrasion resistance, and fire resistance.

Careful consideration should be given to the fact that all properties of the shotcrete matrix are interdependent and certain performance requirements may be incompatible. Examples include low density with high strength, high durability (low w/b ratio) with control of embrittlement, and high cement content with low drying shrinkage.

2.1.9 Testing

In specifying testing requirements for shotcrete, the user should consider the type and frequency of testing in relation to the importance of the structure and availability of test facilities (due to limitations such as remoteness). This may lead the designer to a more conservative design approach which will affect the testing requirements (refer to Chapter 14 Test Methods). Consideration of systems for ongoing monitoring may be required for long-term openings or excavations predicted to be subjected to large displacements.

2.2 DESIGN CONSIDERATIONS FOR REINFORCEMENT

2.2.1 General

There are three approaches to reinforcement used in shotcrete structures:

- Unreinforced.
- Conventionally reinforced with mesh or bars.
- Fibre-reinforced.

2.2.2 Unreinforced Shotcrete

In applications involving exclusively compressive load actions, or no-load actions, it may be appropriate to avoid the use of reinforcement. Such structural systems will exhibit very low tensile strength and ductility and thus the potential development of tensile load actions must be avoided. Unreinforced shotcrete may be quite appropriate for arched structures subject to constant low to moderate compressive stress.

2.2.3 **Conventional Reinforcement**

Conventional reinforcement comprises continuous elements such as steel bars, mesh, and welded wire fabric, post-tensioned strands, and materials such as fibre-reinforced plastic composite bars or mesh. Provided effective encapsulation of the reinforcement with shotcrete of suitable quality is achieved, conventionally reinforced shotcrete elements can be designed in accordance with AS 3600 or AS 5100.5. Incomplete encapsulation of steel reinforcing elements must be avoided as this can lead to rapid corrosion.

To ensure effective encapsulation is achieved, appropriate detailing and fixing of reinforcement, and correct shotcrete placement technique, are crucial. Guidance on recommended methods of achieving good embedment of bars and mesh are included in Chapter 12 and in ACI 506/CP60. The effect of poor encapsulation is a reduction in bond between bar and concrete, which can lead to structural weakness, and an increase in susceptibility to corrosion. Tests have shown that the pull-out resistance of steel bars in shotcrete is generally equal to that of the same bars in cast concrete, but inadequate encapsulation can reduce the pull-out resistance (Trujillo & Jolin, 2018). Guidance on minimum embedment lengths, lap lengths, and spacing between bars for sprayed structures can be found in ACI 318 (2019) and ACI 506.

In Australian practice it has been recommended that the minimum bar spacing be 100 mm and staggered laps be considered to make effective encapsulation of bars with shotcrete achievable. In ACI 318 (2019), the minimum bar spacing in the layer of steel closest to the nozzle should be 12 times the bar diameter, and in deeper layers of reinforcement the minimum spacing should be 6 times the bar diameter (Section 25.2). While development and lap-splice lengths are not specifically addressed for bars in shotcrete within ACI 318 (2019), it is understood that shotcrete is to be treated as cast-in-place concrete for the purpose of estimating minimum development and lap-splice lengths in Sections 25.4–25.6 of ACI 318. However, in order that these assumptions be considered valid, the shotcrete must be fully encapsulated and be placed by a nozzle operator certified in accordance with CP660. This provision is difficult to enforce in Australia due to the limited number of nozzle operators certified to North American practice.

In Australia the convention is that the minimum distance between pairs of lapped bars is three times the maximum aggregate size. The incorporation of more than one layer of reinforcement per application of fresh shotcrete can make it difficult to achieve effective encapsulation without proper preparation, application and shotcrete design. It must be stressed that effective encapsulation of bars is more easily achieved using non-accelerated shotcrete than accelerated shotcrete, and is more difficult to achieve using robotic spraying than manual spraying. Robotic spraying should not be used when spraying into dense reinforcement cages.

Rock bolts and soil nails often introduce a large point load to a shotcrete lining (for example, in a basement wall) that needs to be anchored to the lining using reinforcement. These forces can be distributed into the lining more effectively if a suitable rock-bolt plate or series of radiating reinforcement bars (sometimes called a “spider” or “handle-bar”) are used at the end of the bolt. The spider should always be buried within the shotcrete lining. The plate should be external to the structural layer of shotcrete to be effective and may be covered with non-structural shotcrete.

2.2.4 **Fibre Reinforcement**

Fibre reinforcement comprises short discrete elements distributed uniformly through the body of the shotcrete. The individual fibres are typically made of either steel or polymers, although specialist applications have used Alkali Resistant glass or basalt. Polymer fibres added for reinforcement are defined as macro synthetic fibres and should not be confused with the fibres that can be introduced to shotcrete for reasons other than structural reinforcement, such as control of rebound, plastic shrinkage, and enhancing fire resistance. These non-structural fibres are defined as micro fibres.

The structural role of fibre reinforcement in shotcrete is to provide post-crack load capacity (toughness). They are not included to increase the tensile or flexural strength of the uncracked concrete matrix. Toughness describes the ability of fibre-reinforced shotcrete to sustain and potentially redistribute load actions after cracking. In deterministic design, the shotcrete structural system is ideally designed not to crack. However, due to the complexity and indeterminate nature of some structural systems, especially when potential ground movement is involved,

there remains the potential for an under-estimation of load actions for which post-crack load capacity is crucial to maintaining overall safety and serviceability.

Toughness is quantified in terms of post-crack residual flexural strength or energy absorption, which is assessed using beam or panel test specimens. Measures of post-crack load capacity derived from beam and panel specimens (see Chapter 14 Test Methods) are used to quantify the ability of a cracked fibre reinforced shotcrete structural system to support load actions. Limited guidance on the design of FRS structures is provided in the *fib* Model Code 2010.

3

Design of Shotcrete Linings
for Civil Tunnels

3.1 INTRODUCTION

This chapter outlines the typical industry practices applicable to the design of shotcrete linings in Australian tunnels and caverns. Many of the principles described in this section also apply to shotcrete linings within open excavations and cut-and-cover structures. For simplicity, the term "tunnel" will be used to encompass all underground civil applications.

As tunnels are commonly procured by government authorities who have ultimate responsibility for delivering and regulating the asset, the functional and performance requirements, and the codes and standards to be used, are usually defined in the scope and performance requirements stipulated by the ultimate asset owner. Typically, a design process is required to include considerations of constructability, safety in design and sustainability. Risk management processes may be incorporated into the design process, to the requirements of the authorities and regulations relevant to the asset (for example rail safety regulation).

Part 3.2 of this chapter addresses the legislative and safety context of tunnel lining design. Part 3.3 addresses the typical design codes and standards and reference guidelines applied in Australian tunnel lining design. Part 3.4.1 considers the functional design considerations of a tunnel lining while Part 3.4.2 addresses strength and serviceability design. Part 3.5 addresses the appropriate quality control standards to be applied for tunnel lining construction and Part 3.6 addresses maintenance and repair. Aspects of production, workmanship, and safety are described in other chapters.

3.2 LEGISLATIVE AND SAFETY CONTEXT

3.2.1 Workplace Health and Safety

The design, construction and operation of tunnels and, in particular, shotcrete associated with civil tunnels, are governed by the requirements of each state's Workplace Health and Safety Act, and Workplace Health and Safety Regulations. These acts and regulations are harmonised across Australia. Associated with the Acts and Regulations are a number of Codes of Practice that have been developed to provide practical guidance on how the requirements of the WHS Acts and Regulations need to be implemented. The Codes of Practice define acceptable work practices and roles and responsibilities. Further information on the full set of codes or practice may be found on the Safework Australia website (www.safeworkaustralia.gov.au). With regards to shotcrete design for tunnels, an important reference is Safe Design of Structures – Code of Practice (Safework Australia, 2018). This Code of Practice provides responsibilities for clients, contractors, designers and operators to ensure the health and safety of construction workers, operators and tunnel users. Other references included Workcover Codes of Practice e.g. for tunnels under construction (NSW).

3.2.2 Safe Design

Safe design means the integration of control measures early in the design process to eliminate, or, if this is not reasonably practicable, minimise risks to health and safety throughout the life of the structure being designed.

The safe design of a structure will always be part of a wider set of design objectives, including practicability, aesthetics, cost and functionality. These sometimes-competing objectives need to be balanced in a manner that does not compromise the health and safety of those who work on or use the structure over its life.

3.2.3 Client Responsibilities

The Client commissioning a project needs to consult with the designer about how health and safety risks arising from the design are eliminated or minimised so far as is reasonably practicable. They also need to provide the designer and contractor with any information in relation to hazards and risks on the construction site.

3.2.4 Principal Contractor Responsibilities

The principal contractor may be the client or they may be engaged by the client to manage and control the workplace. The principal contractor has a duty to ensure the construction work is planned and managed in a manner that eliminates or minimises health and safety risks so far as is reasonably practicable.

3.2.5 Designer Responsibilities

A designer has a number of responsibilities in the design of safe structures including:

- Assessing known hazards and risks during the design stage.
- Assessing what is reasonably practicable.
- Applying the relevant design standards.

Designers do not have management and control over construction, but they must consult, cooperate and coordinate design activities with their client. Their responsibilities are limited to their original design and not any modifications by others. Sometimes, it can be difficult to clearly delineate who has responsibility for the management of hazards and risks associated with a structure as designer responsibilities for separate design elements may be concurrent and overlapping. Therefore, it is important to establish a clear communication protocol to ensure all parties are clear on who owns a particular risk at each development phase of a project.

3.2.6 Risk Management

Management of project risk is often implemented through identification of hazards, assessment of risk, then management of risk throughout design, construction and operation. Risk management includes processes to transfer and manage risk between various owners (including the designers, principals, and contractors) and project stages.

3.3 CODES AND STANDARDS

There are a number of relevant codes and standards that can be used specifically for shotcrete design. Also relevant to the design process for structures are the Safe Design Code of Practices discussed above, and the Code of Practice for Risk Management of Tunnel Works (ITIG, 2012) published by International Tunnelling Insurance Group. Compliance with this document is often a requirement for obtaining insurances for a tunnel project.

Clients for most civil tunnels require a design life of 100–120 years. In Australia the most appropriate design standard for structures requiring a design life of 100–120 years is AS 5100 (2017). This standard does not specifically cover tunnel structures or fibre reinforced shotcrete without conventional reinforcement. However, the code can be used to provide many of the principles, design approaches, and durability considerations.

The following documents follow principles similar to those used in AS 5100:

- Concrete Society (2007) *Technical Report No 63 – Guidance for the design of steel fibre reinforced concrete.*
- Concrete Society (2007) *Technical Report No 65 – Guidance on the use of macro synthetic fibre reinforced concrete.*
- Rilem (2002) TC162-TDF – *Sigma-Epsilon design method – final recommendation.*
- Model Code 2010, *fib* (2012).

Although the above documents are guides only, they are often mandated by clients, thereby raising their standing to a similar order of precedence to standards and codes.

3.4 DESIGN CONSIDERATIONS

3.4.1 Functional Requirements

The functional requirements to be considered in tunnel design are usually defined by the ultimate asset owner or authority. The shotcrete elements of a tunnel must be designed in the context of the intended space usage and other support elements being incorporated. Functional considerations include the required geometric arrangement, the required internal finishes and aesthetics, the allowable effects of the tunnel's construction on the surrounding ground, infrastructure and buildings, the design life, required resistance to groundwater (waterproofing), fire resistance, seismic design, imposed loads, and the operational requirements and maintainability. These aspects are further described below.

3.4.1.1 *Design for Durability*

The design life of significant public infrastructure assets is commonly stipulated as 100–120 years. Underground excavations associated with private developments may have a design life more in line with the associated assets. For concrete structures this is commonly 40–60 years for buildings. Where the tunnel lining is known to be temporary, a design life of 5 or 10 years may be stipulated.

The determination of the design life of shotcrete tunnel linings must take exposure conditions into

account. This includes the ground and groundwater chemistry for surfaces in contact with the ground, and the internal environment of the tunnel at exposed surfaces. The waterproofing strategy also has an influence on the life of the lining as it affects the groundwater contact against, and seepage through the lining.

While the shotcrete matrix itself is rarely found to suffer durability concerns, common considerations in the context of possible matrix degradation include:

- Alkali-silica reaction if unsuitable aggregates are used and/or no supplementary cementitious materials are included in the mix.
- Deterioration due to salt crystallisation.
- Sulphate and acidic groundwater attack.
- Attack by ammonia-salts in contaminated groundwater (e.g. due to landfills).
- Accelerator over-dosing (resulting in high ettringite content, low strength and sulphate sensitivity).

More details in regard to these forms of degradation may be found in Chapter 5.

Beyond the above fundamental considerations of the concrete mix itself, the main threat to durability is the potential for corrosion of reinforcing elements. In the Australian context, the durability considerations relating to steel bar and mesh reinforcement is commonly considered by complying with AS 5100 durability requirements.

For steel fibre reinforced shotcrete, the potential loss of tensile strength in the zone of anticipated steel fibre corrosion must be considered. The estimated depth of corrosion is based on an assessment of chloride diffusion and carbonation depths over the design life. Allowance must also be made for in-service crack widths. For steel fibres in an underground environment, allowable crack widths in the order of 0.15 mm to 0.3 mm are commonly stipulated depending on the specific service environments under consideration (*fib* Model Code 2010, 2012). Allowable crack widths in permanent linings must be considered carefully in relation to the anticipated exposure conditions, which will depend on the function of the tunnel. Further details in relation to assessment of allowable crack widths are described in Section 4.2.4.2.

Water ingress at cracks is a primary cause of corrosion. Slow seepage through a narrow crack can promote autogenous healing, but measurable flow (also termed “percolation”) through the lining will preclude the possibility of autogenous healing since calcium carbonate is washed out and deposits as efflorescence on the receiving surface. Over the longer term, water seepage through a lining is likely to result in the corrosion (and loss of tensile strength) of steel reinforcing elements in the shotcrete lining.

The potential lack of full encapsulation of shotcrete around steel reinforcement and subsequent lack of protection against corrosion is a practical risk of construction. This risk is minimised by detailing the design to ensure that only one layer of steel or mesh is sprayed at a time, and by avoiding excessively dense reinforcement or large bar sizes. More information on detailing of conventional reinforcement in shotcrete structures can be found in Chapters 2 and 12.

Macro-synthetic fibres do not suffer corrosion, but are susceptible to chemical attack from bleach and to long term creep deformation that can lead to widening of cracks in response to sustained high levels of tensile stress (Bernard & Thomas, 2020).

3.4.1.2 ***Design for Water Resistance***

The design for water resistance should consider the anticipated hydrogeological conditions and the desired internal environment of the tunnel. If relevant, internal requirements may be stipulated as “drip free” or “dry”, or may prescribe certain conditions of allowable dampness and/or total water ingress over defined zones. Commonly these requirements are defined by the owner/authority. In some cases, the owner/authority may prescribe the application of a waterproofing membrane.

In general, a shotcrete lining is, in itself, not adequate to resist percolating surface water or groundwater from penetrating into the tunnel. The surrounding geology needs to be considered. Where some water ingress to the internal tunnel environment can be tolerated, drained tunnels are much cheaper and easier to construct than a fully water resisting (or “tanked”) lining due to the significant external water pressure which must be resisted by an undrained lining.

An important consideration in the selection of appropriate groundwater treatment is the potential for deposition of salts, metal oxides and migration of contaminants through the shotcrete lining and the handling and treatment of potential groundwater ingress within the tunnel lining itself. Consequences include

aesthetic and durability impacts, the potential to corrode internal fixtures and elements in the tunnel, and the maintenance, treatment and disposal costs associated with the ingress of water and any precipitates which form in the internal drainage system.

Where all external water is to be excluded from the tunnel environment, i.e. as a "tanked" structure, a membrane is generally required to be installed outside of the secondary lining of the tunnel. The secondary lining must be designed to withstand the full potential external water pressure which may accumulate against the waterproofing membrane over the life of the tunnel.

Where rock quality permits, a drained solution may be a more cost-effective permanent tunnel lining option. In this case, a groundwater control system comprised of relief holes, strip drains or void forming drainage blankets (drainage system) is generally applied between the primary and secondary tunnel linings. The groundwater control system is tailored to the specific geological features and seepage conditions encountered. Umbrella-type waterproofing or drip-shields with a membrane may also be specified in some cases, mostly where the intention is only to avoid drips through the shotcrete but with drainage allowed through the tunnel invert. In this case, the secondary lining is usually designed for a reduced potential external water pressure provided that appropriate detailing is incorporated into the groundwater control system design.

Where a tight or defect-free rock mass is present, moisture ingress through the shotcrete may be minor and may not require any additional waterproofing treatment.

3.4.1.2.1 *Spray Applied Waterproofing Membranes*

Preparation of the application substrate shall comply with the manufacturer's recommendations. As a minimum the substrate needs to comply with the following criteria:

- No large holes or indentations.
- No running water.
- Even and consistent surface finish which is uniform.
- No foreign objects such as oversize aggregate/ fibres – No contamination from previous shotcrete.

Where shotcrete is sprayed against a double bonded spray applied waterproofing membrane the minimum requirements for the Shore A Hardness as recommended by the manufacturer of the product must be observed. Where steel fibre reinforced shotcrete is used, a trial should be undertaken to confirm that the membrane has attained sufficient strength and is not to be punctured by the steel fibres.

3.4.1.2.2 *Sheet Membranes*

Spraying against a sheet membrane is not recommended, however if necessary, requires several preparatory activities including but not limited to the installation of additional rondels to reduce membrane sag, pinning a small pitch mesh over the membrane and initially spraying the mesh in with a smoothing or gunite layer to establish an initial base subsequent layer can adhere to.

It is important however to recognise that despite the best effort air pockets or voids tend to remain behind the sheet membrane which can impact on the structural performance of the lining. The Designer should specify whether any secondary activities such as backfill grouting must be undertaken.

3.4.1.3 ***Design for Fire Resistance***

Wherever the tunnel is exposed to potential fire events, the design of the shotcrete lining must consider fire resistance. The corresponding design fires are generally stipulated by relevant regulatory requirements such as AS 1530.4 (2014), Building Code of Australia (2019), and relevant statutory and authority requirements for road and rail tunnels. These design fire cases may include temperature curves from a minimum 450 °C up to 1300 °C.

In addition, international guides provide useful design guidance. For example, both the PIARC (2004) guideline and the ITA (2017) consider that the most fundamental criterion that needs to be met by any tunnel structure subject to fire is that the tunnel must not collapse during a specified time period and the risks associated with property damage and economic losses are significantly reduced. This is also consistent with the Austroads (2019) guideline that specifies that in the event of a fire, the tunnel ground support system should provide:

- The ability to retain the structural integrity of the tunnel, albeit with some damage, in the event of a major fire.
- A limit to structural damage in the direct area of

the fire to limit the impact on assets, including adjacent infrastructure and surrounding road networks.

- Retention of the structural stability as the area cools to ensure safety of personnel entering the site after the fire.
- An area near to the fire, but which may still be affected by hot smoke and radiant heat, which provides a level of safety and access for emergency service personnel during an incident.

It is important to note that the requirements described in bullet points one to three above, may be achieved by other ground supporting elements rather than the shotcrete itself where tunnels are excavated in fair to good quality rock masses. For example, both the PIARC and ITA guides recognise that in relatively stable and competent ground, the fire resistance requirement for shotcrete may be significantly reduced as the global structural integrity, both during a fire event and as the areas cool down, is generally retained by the rock-bolt-reinforced rock mass. As a result, fire resistance in these cases is generally limited to providing safety with regard to the fourth bullet point presented above, i.e. a safe evacuation of users and safe access to emergency service personnel during a fire. It should also be noted however, that return to service objectives following a fire event may mean that an authority requires the structural lining to have greater fire resistance than that recommended in guidelines.

In the case of unstable ground and poor rock masses and where the shotcrete lining plays a more significant role in retaining global structural integrity during and post-fire events the lining thickness generally requires a passive layer or sacrificial layer that considers the full effects of internal temperatures on the linings, including additional design action effects such as additional axial and/or bending moments induced by thermal expansion and contraction effects as well as thermal damage leading to shotcrete strength reduction. Internal time-temperature conditions derived either by means of specific studies of the potential fire loads, or standard time-temperature curves, should be applied in the analysis of the tunnel lining.

In all cases, the shotcrete must be able to support all loads that it is subjected to, including those of heavy mechanical and electrical equipment, for temperatures up to 450 °C and for the specified time period. This is required because this temperature approximately equates to a radiative load of 5 kW/m^2, which is the maximum tolerable radiation level for access of firefighting personnel. For all other fire cases exceeding this temperature, it must be recognised that, thermal damage to the shotcrete lining will occur. Ultimately, a damaged shotcrete lining will need to be assessed and replaced. Details on suitable repair methods are provided in Section 6.

In all cases, consideration of the potential for spalling, and for the reduction of concrete and reinforcing element strength due to temperature increase in the lining, must be considered under relevant load scenarios. For conventionally reinforced shotcrete linings (reinforcing bar and/or mesh), the fire design considerations of AS 3600 may be applicable. More commonly, bespoke time dependent thermal modelling of the lining temperature response to internal head loads, and commensurate loss of concrete and reinforcing element strength, should be undertaken. International standards such as Eurocode 2 Part 2 may be considered for thermal impact assessments. Where extreme internal fire load cases are considered, such as in transport tunnels, polypropylene microfibres (PP fibres) are usually stipulated as part of the permanent lining system to mitigate against explosive spalling risks, thereby protecting the tunnel lining from potentially more extensive damage during a fire incident.

Commonly, testing of concrete mixes under appropriate fire conditions is prescribed by transport authorities as the explosive spalling behaviour of the shotcrete is dependent on the specific concrete mix constituents and polypropylene microfibre dosage.

It is important to note that actual fires in tunnels very rarely follow the time temperature curves of specified design fires, which is why special safety precautions are required when re-entering tunnels after a fire incident apply, regardless of any design considerations made.

3.4.1.4 ***Design for Seismic Effects***

In the Australian context, as a minimum, tunnel infrastructure is generally required to meet the prescriptive requirements of AS 1170.4 which defines an appropriate analytical approach for the definition of the earthquake peak ground acceleration (PGA) taking the geo-structural object under consideration. On the other hand, the Austroad Guide to Road Tunnels Part 2 suggests that performance of the tunnel structure

should be assessed against the following criteria:

- After the design return period event, i.e. under a maximum design earthquake event (MDE), the tunnel should be usable by emergency traffic, although significant damage may have occurred, and some temporary repairs may be required. Permanent repair to reinstate the design capacities for both static and seismic loading should be feasible.
- After an event with a return period significantly less than the design value, i.e. under an operating design earthquake (ODE), damage should be minor, and there should be no disruption to traffic.
- After an event with a return period significantly greater than the design return period event, i.e. under a maximum credible earthquake event (MCE), the tunnel should not collapse, although damage may be extensive. It should be usable by emergency traffic after temporary repairs and should be capable of permanent repair, although a reduced capacity for future seismic events may be acceptable given this is a highly infrequent event.

Hashash et al. (2001) defined an MDE event as the maximum level of shaking that can be experienced at a site with a small probability of exceedance during the design life (e.g. 3–5%). This small probability typically correlates with returning periods of up to 2500 years, which is the maximum return period in AS 1170.4. The ODE is defined by Hasash et al. (2001) as an earthquake event that can be reasonably expected to occur at least once during the design life with a probability of exceedance between 40 and 50%, which correlates to a return period of up to 200 years. A reasonable estimate of the ODE is given by the NZTA Bridge Manual (2016) with the ODE equal to one fourth of the MDE acceleration. The NZTA Bridge Manual (2016) defines the MCE as an event with a return period significantly greater than the design value with a PGA estimated as 1.5 times that of the MDE, which is consistent with the description in the Austroads guide.

For an ODE or MDE event, and particularly in the cases of deep tunnels excavated in competent rock, the use of simplified design methods such as that proposed by Hashash et al. (2001) adopting free field procedures for evaluation of earthquake impact on shotcrete is often considered acceptable. This is based on the understanding that tunnels in fair to good quality rock generally are capable of withstanding moderate earthquake events without the need to significantly modify their designs to meet earthquake requirements. This was demonstrated, for example, by Jaramillo (2017) where he presented a number of case histories. For an MCE event, particularly for shallow tunnels, either pseudo-static numerical analysis or an even more detailed dynamic analysis may be considered to assess the potential for progressive failures.

3.4.1.5 *Other Internal Loads*

Each specific tunnel environment has its own inherent set of internal actions. Primarily, internal fit-outs and functional elements within the tunnel must be considered. These can be substantial, for example jet fans, gates, or bulkheads, which may require anchorage through the shotcrete lining into the surrounding ground. Smaller fixtures anchoring within the shotcrete lining are typically used for lighter elements such as cable trays and service lines.

Other major loading considerations related to the functional requirements of the tunnel may include collision loads (road and rail tunnels), air blast (road and rail tunnels), sabotage (small explosives blast), internal or external hydrostatic pressure, and pressure surges (hydropower and water conveyance tunnels).

3.4.1.6 *Design for Maintainability*

Client requirements for maintainability need to be addressed in the design. Generally, these include a requirement for minimum availability and documentation of the required inspection and maintenance regime in order to achieve the intended design life.

3.4.1.7 *System Redundancy*

Civil design standards generally require that structural systems fail in a ductile manner after they reach their ultimate limit state. The direct implication for shotcrete lining design is that the structural performance of the lining must consider post-cracked behaviour at the ultimate limit state and enable post-cracked strains within the lining to be accommodated without collapse. Tunnel design should consider the post-peak strength of the shotcrete lining element as part of a system of support incorporating the other elements contributing to stability, including rock bolts, ground anchors, and the ground itself.

In a tunnel situation, consideration should also be given to ensure supported elements and the lining itself do not fall from the tunnel crown or walls without prior substantial observable signs of distress (enabling intervention under a maintenance regime). This is generally achieved by providing sufficient post peak ductility and a regular inspection regime.

3.4.2 **Design for Strength and Serviceability**

3.4.2.1 ***Introduction***

Design for strength and serviceability in civil tunnels is more complicated than for above ground structures. The basis of most modern design codes is to ensure that the probability of failure is small enough.

In civil tunnels, load and resistance are not independent. The primary structural member in a tunnel is the ground itself; support members (such as shotcrete) assist the ground in its job. It is incorrect to see the ground as load and the shotcrete as resistance.

Rational design of tunnels therefore requires a generalised probabilistic basis. While such design remains difficult, and rarely used in civil tunnel design, a useful introduction is provided in Potvin & Hadjigeorgiou (2020).

In an attempt to retain a limit state approach, Eurocode 7 describes a number of approaches to this problem, further discussed by Schweiger et al. (2017). The AS 5100 basis of design described in the next section is one of these approaches. While this methodology is very common in the industry, the design practitioner should recognise the limitations at its base.

3.4.2.2 ***Limit State Design***

Similar to other civil structures, a shotcrete lining for civil tunnels should be considered unfit for use if it reaches any one of a number of states at which it no longer satisfies the criteria governing its performance or use. These limit states are broadly classified as either Ultimate Limit States (ULS) or Serviceability Limit States (SLS).

The application of semi probabilistic safety concepts involving load factors and material factors of safety is not straightforward in tunnelling, particularly in primary/ secondary tunnel support design applications because the ground acts as both load and resistance. Tunnel support design relies on the tunnel support interacting with the ground which is complex and inherently non-linear. Interaction between the support stiffness and the ground relaxation ultimately governs the actual load which acts onto the tunnel support system.

Specifically, this can become problematic where elasto-plastic finite element models are used to analyse tunnel support systems and their interaction with the assumed ground conditions.

A methodology for designing "soil-supporting structures" is described in AS 5100.3 Clause 7.3.3 (c):

"An appropriate engineering analysis should be carried out with all loads and load combinations un-factored to determine the action effects imposed through the soil (S_e) for:

(a) The soil-supporting structure as a whole for geotechnical strength design, e.g. active pressure on a retaining wall, or earth pressure on a buried structure, and

(b) Each component of the structure for structural strength design, e.g. bending moments or shear forces."

When adopting the process described in AS 5100.3 to the design of tunnel support, there are two principal criteria to be satisfied, Clause 7.3.3 (e) and (f):

(a) The tunnel support is to be proportioned so that the factored ultimate geotechnical strength is equal to or exceeds the ground-imposed action effect and meets the following requirement

$$\Phi_g R_{ug} \geq 1.0 S_e$$

(b) Each tunnel support element (i.e.. rock bolts and shotcrete) is to be proportioned so that the factored ultimate structural strength meets the following requirement

$$\Phi_s R_{us} \geq \gamma S_e$$

where the symbol Φ refers to reduction factor and γ to a load factor. By satisfying these two inequalities with the reduction factors and load factors specified in the design standard, the design indirectly targets a minimum reliability index which is associated with a certain probability of failure. For this reason, the method is defined as a semi-probabilistic method as the probability of failure is not directly calculated.

3.4.2.2.1 *ULS Design*

Verification against Ultimate Limit States typically includes checks for stability or loss of static equilibrium, strength, and/or excessive deformation inducing a failure. This verification is carried out by satisfying the

requirement that the ultimate design action does not exceed the ultimate design capacity.

An ultimate design action is defined in most design codes and standards as an action that has a 5% probability of being exceeded during the design life. As discussed above, most design standards adopt a semi-probabilistic approach such that the ultimate design action is generally estimated by factoring up design actions or design action effects with specific load factors. For example, AS 5100.3-2017, which is generally adopted in the design of ground supports for tunnels in Australia, including the design of shotcrete, specifies a load factor of 1.5 to be applied on design action effects, ie. on internal forces and bending moments when checking for structural strength and stability.

The design resistance or capacity is defined by a characteristic strength which is the value of the material strength that is exceeded by 95% of the material (lower characteristic strength). This is an important issue that needs to be considered when specifying the shotcrete mix and its performance requirements. For example, strength parameters should be specified as characteristic values such that it is compatible with the applicable design standards. The ultimate design capacity is then defined by the characteristic resistance multiplied by a strength reduction factor defined in the code adopted. However, this can be problematic for fibre reinforced shotcrete because the typical Coefficient of Variation in post-crack performance lies in the range of 20–30% (accounting for both within- and between-batch variation) depending on which type of test specimen is used. When the mean performance is factored down to arrive at the 95% characteristic performance level, half the measured performance is discounted. There has been widespread reluctance to accept such a conservative approach given that fibres constitute a significant part of the total cost of FRS.

It is important to note that neither a tunnel-specific nor fibre reinforced shotcrete-specific design standard exists in Australia, and reference is typically made to conventionally reinforced concrete codes such as AS 5100.5-2017 and AS 5100.3-2017. For example, it is common practice in Australia to assume reduction factors for the design of fibre reinforced shotcrete to equal that used for plain concrete, e.g. $\phi_s = 0.6$. However, some of the inherent differences between the design of fibre reinforced shotcrete for tunnels and conventionally reinforced concrete should be considered.

Firstly, the behaviour of conventionally reinforced concrete is generally only estimated on the basis of results of compressive strength tests since flexural tensile strength is taken as zero under ULS for plain concrete. On the other hand, the design of fibre reinforced shotcrete is generally based on multiple parameters and test results including specific tests for flexural performance, both peak and post-cracking resistance, in addition to compressive strength. Secondly, the typical capacity reduction factors for conventionally reinforced concrete are derived based on characteristic strengths assessed from standard testing which typically only involves compression tests on cast cylinders. In contrast, shotcrete characteristic values are often assessed based on the results of field trials with sprayed samples which take some of the uncertainties related to the placement method and workmanship into account. As a result, a lower strength reduction factor for the flexural performance could in theory be adopted. By way of comparison, the DBV-Guide to Good Practice – Steel Fibre Concrete (2001) specifies a reduction factor of $\phi_s = 0.8$ for flexural performance post-cracking. There also exists the issue of load re-distribution: fibre reinforced shotcrete has a far superior ability to re-distribute load away from areas of peak loading toward more lightly loaded areas, usually facilitating both a higher total load capacity and a gentler unloading curve.

To take some of the above differences into account while a tunnel or shotcrete specific standard does not exist with specific reduction factors, one approach currently adopted in the design of civil tunnels in Australia is to retain the reduction factor for plain concrete based on AS 5100.5, i.e.. $\phi_s = 0.6$, but accept the average batch test results of sprayed samples equal to or greater than 87% of the specified characteristic strength value as structurally adequate and conforming. In theory, this would roughly equate to a final reduction factor of $\phi_s = 0.69$ which sits between those of plain and conventionally reinforced concrete. This approach is consistent with the *fib* Model Code 90 where the strength reduction factor for concrete is represented by $\phi_r = 1/(\gamma_m{}^*\gamma_{conv})$. The factor γ_m considers unfavourable deviation of concrete strength from its characteristic value f_{ck}, model uncertainties, variation of geometrical and material properties and the safety level, and γ_{conv} is a conversion factor that takes into account the decrease of in-place strength versus the characteristic strength. The *fib* Model Code 90 recommended a value of

γ_{conv} = 1.15 which is the same as that recommended in Clause A6.4.2 of AS 5100.5-2017 for when samples are taken from the structure, thus with reduced uncertainty from a workmanship and placement point of view. This analogy is also consistent with clause R26.12.4 of ACI 318M-2019 which accepts average values exceeding 85% of the specified strength target as structurally adequate and conforming results when samples are taken from the structure.

One important issue related to ULS design is that load factors and capacity reduction are related to probability of failure as assessed within a specific standard. Therefore, one single standard or code of practice should be adopted and mixing of load factors and capacity reduction factors from different codes of practices must be avoided as the assumed probability of failure is unlikely to be valid. The same applies to the inter-dependency and relationship between design methods, reduction factors and a specified method of testing for fibre reinforced concrete. For example, while the DBV guide recommends a design method and its reduction factors based on beam tests in accordance with DIN 1048, both the TR 63 guideline and AS 5100.5-2017 propose design methods based on beam testing for the flexural performance of fibre reinforced concrete in accordance with EN 14651. The results of these two different tests and design methods should not be interchangeably adopted.

3.4.2.2.2 *SLS Design*

Verification against Serviceability Limit States in civil tunnels typically involves the assessment of internal stresses and/or deformations of the shotcrete lining that could induce excessive cracking with potential long-term strength degradation and/or impacts on external structures near the tunnel.

In summary, deflections and crack widths need to be controlled at the SLS. However, as stated in the TR 63 guideline, it is usually impossible to reliably predict crack widths in FRC structures without conventional reinforcement since the crack widths are not related to stresses given by elastic analysis once the section capacity is exceeded and softening develops. In circumstances where it is necessary to control crack widths within strictly prescribed limits, e.g. <0.15 mm, consideration should be given to providing conventional reinforcement in addition to fibres. Alternatively, a sacrificial shotcrete thickness may be assumed for long term durability, and an SLS capacity curve derived for the intended crack width using the method given in RILEM TC 162-TDF sigma—epsilon design guideline as long as a compression zone exists within the cross-section of the member.

3.4.2.3 ***Analysis Methods***

There are a number of analysis methods available for tunnel design. Analysis methods for tunnel shotcrete linings depend on the structural support system under consideration and typically involve one or more of the following methods:

- Empirical Methods
- Limit Equilibrium Methods
- Closed Form Analysis Methods
- Numerical Analysis Methods
- Structural Beam/Plate-Spring Modelling

The design of the Primary Support for mined tunnels may use empirical methods, limit equilibrium methods, closed form analysis methods, and numerical (ground-structure interaction) analysis methods.
The design of secondary support for mined tunnels typically uses numerical analysis models 2D & 3D as well as structural beam spring models. It is strongly recommended to use more than one, and preferably more than two, methods of analysis when assessing ground loading and lining resistance. This is because all the methods are subject to uncertainties and produce results that may differ significantly. When a substantial difference in outcome arises, careful consideration should be paid to the assumptions underlying each method and their applicability to the design situation at hand (e.g. elastic compared to non-linear methods of analysis for materials exhibiting post-crack ductility). Particular attention should be paid to differences in lining/ground behaviour for bonded versus un-bonded linings on hard rock. Bonded linings tend to experience shear failures, particularly in stiff blocky ground, whereas un-bonded linings tend to exhibit flexural failures.

The following provides a brief description of each method.

Empirical methods

Empirical methods may be employed for preliminary or order of magnitude selection of the required excavation scheme and primary support system. Empirical methods are used as a design tool for all mined excavations in rock for initial selection of the length of rock-bolts and thickness of shotcrete lining.

It is not recommended that empirical design tools are used as the only design approach (Pells, 2002).

The empirical methods used may include the following common rock mass classification systems:

- Rock Mass Quality (Q) system of the Norwegian Geotechnical Institute (NGI) (Barton et al., 1974; Barton & Grimstad, 1994; Barton, 1996).
- Rock Mass Rating (RMR) classification system (Bieniawski, 1976, 1989).
- The NGI Q-System was updated by the NGI in 2015.

Empirical design methods should be complemented, where possible, with local experience and local precedent design.

Limit equilibrium methods

Limit equilibrium (key block) analyses, where employed, can be performed using suitable software programs or other applicable methods to assess the stability of rock blocks or wedges around underground openings in a jointed rock mass. The analyses identify the most probable size, location, weight, and shape of rock blocks or wedges that could kinematically fall out of the tunnel crown or sidewalls by the action of gravity, under the boundary conditions of the prevailing discontinuity orientations. Results of the limit equilibrium analyses can be used to verify that the Primary Support elements proposed are adequate to stabilise the rock blocks that are potentially unstable, including the maximum block or wedge in various locations and ground conditions that are expected to be encountered along a tunnel alignment.

Closed form analysis method

Closed form analysis methods may be employed to enable a further assessment of the Primary Support requirements. The methods span the range between ground supporting shotcrete arches to shotcrete used in conjunction with rock bolts. Shotcrete used with rock bolt support is designed to act in one of two ways, namely a membrane spanning between bolts, or by adhesion to the rock (Pells, 2002; Barrett & McCreath, 1995).

This assessment considers the effectiveness of the shotcrete for supporting structurally defined blocks and wedges, thereby avoiding progressive loosening and destabilisation of the rock mass around the tunnel opening. It is assumed the shotcrete capacity is governed by one of the following two combined structural failure mechanisms:

- Adhesion and direct shear.
- Flexure and punching shear.

This method is very similar to techniques used to design column-supported suspended concrete slabs, where the lining is assumed to behave like a slab and the rock-bolts correspond to the columns. Where adhesion and direct shear is relied upon, careful consideration must be given to the corresponding requirements on substrate preparation and any long-term effects which may impact on the long-term adhesion performance (Hahn & Holmgren, 1979). Where the design is based on flexural resistance it is important to ensure that the relevant rock bolt end hardware can transfer the associated punching shear loads at the bolt locations. This can be achieved via shear connection plates. In some instances, it may be useful to test the ultimate capacities of the proposed connection details to assess the post failure ductility of the proposed bolt/shotcrete connection detail.

Numerical analysis methods

Where appropriate, numerical analysis methods (finite element or finite difference) considering the ground-structure interaction can also be used to assess the state of stress and deformation in the Primary Support elements and the rock around the tunnel excavation. These analysis tools can consider the sequence of works including sequential excavation and support installation. Numerical models can simulate the rock mass with continuum elements for continuum modelling or distinct elements for dis-continuum modelling, rock-bolts with cable elements, and the shotcrete lining with beam or continuum elements. Interface elements may be used between the rock continuum and lining elements where deemed appropriate.

The material properties of the ground continuum elements may be represented by elastic-plastic Mohr-Coulomb parameters, Hoek-Brown parameters (Hoek & Brown, 1980; Hoek et al., 2008), or other appropriate material models as required by site-specific conditions. Linear-elastic material models are mostly used for the beam elements representing the shotcrete lining. Continuum or dis-continuum methods that model individual joint/bedding planes may also be used to analyse rock block and/or wedge stability, and verify results of the limit equilibrium methods. Two- or three-dimensional numerical models may be used. Since 3D arching of the rock mass will occur as the excavation advances, appropriate adjustments (ground relaxation)

are typically introduced to 2D plane strain models to capture 3D effects.

Structural beam/plate-spring modelling
(Duddeck & Erdmann, 1982)

Bedded beam models provide a simplified design approach that may be used for the design of primary and secondary support systems where rock bolts cannot be used, i.e. in poor ground conditions or where the installation of rock bolts is constrained by other factors such as proximity to services and utilities or by proximity to the underground support stratum.

Structural finite element packages in both 2D and 3D are commonly used to model the permanent structural linings of the mined tunnels. The lining is considered to be a series of short, straight beams connected by nodes aligned with the centreline of the secondary lining. The nodes are connected to radial springs, which simulate the stiffness of the surrounding rock mass. The springs are only activated when in compression (i.e. when the lining is deflecting towards the ground). Within these programs, the ground reaction springs can be specifically defined using force versus displacement tables, which enables the compression-only behaviour to be modelled. A nonlinear elastic analysis is performed to account for the nonlinearity of the springs; however, the shotcrete arch lining itself is typically assumed to behave elastically in the analysis. Alternatively, a more detailed design approach using the same finite element software can more accurately model the lining behaviour using elasto-plastic material behaviour.

3.4.2.4 *Structural Lining Resistance*

The structural actions sustained by the support elements must be compared with their respective capacity limits. For thick shotcrete linings the structural lining resistance is typically checked by comparison of resulting design action effects (i.e. forces and moments), against the relevant moment thrust and shear thrust capacity interaction diagrams. For thin shotcrete linings, in-plane compression is usually taken as minimal and the lining is designed for flexure and shear only. Most methods of structural analysis are elastic, thus the post-cracking capacity provided by the reinforcement is ignored. This is a conservative design approach and is only appropriate for achieving a crack-free structure under service loads. Structural linings may be designed more efficiently by considering the ductility provided by the reinforcement. The ductility can be utilised through plastic or non-linear methods of analysis to develop a higher estimate of total system support capacity. Further details on structural resistance requirements are provided in Section 4.2.4 Ultimate Limit State Design.

Elastic & yield line methods

Structural resistance can be assessed on the basis of elastic analysis concepts or it can be based on yield line methods. Where yield line methods are used (e.g. Johansen, 1972; Jones & Wood, 1967), careful consideration must be given to the redistribution limits for fibre reinforced shotcrete linings. It is noted that the redistribution capacity of fibre reinforced concrete is significantly lower than that to bar reinforced shotcrete linings.

Compressive membrane action

When flexure gives rise to cracks in a restrained lining, a compressive membrane stress may be self-generated within that lining. This compressive stress has the effect of increasing the flexural capacity of the membrane both at first crack and in the post-crack range. It will also generate an arching action if a lever exists between adjacent regions of compression in a folding mechanism (Reid & Bernard, 2020). This is almost always the case for geometrically regular shotcrete linings, particularly if the lining is curved. Exploiting Compressive Membrane Action (CMA) in design can lead to a peak load resistance that is several times greater than the load resistance at first crack in a typical lining, and can complement or verify non-linear methods of numerical analysis. Accounting for CMA in lining design can result in a significantly more efficient structure. It is, however, important to consider the effect on capacity of potential geometric imperfections which are likely to occur during shotcrete installation.

Shear transfer at bolts

Most thin shotcrete linings are designed to support local ground loads arising between bolts. The bolts provide global support around the excavation, and most bolts also support the local ground loads as they are transferred through the lining and into the bolts to the deeper ground around the excavation. This gives rise to shear and flexural stresses in the lining around the bolt heads since the bolts essentially act as point loads in their role as restraints to the lining. This is particularly true for de-bonded linings. The shear and flexural resistance of the lining/bolt interface must be checked to confirm that punching shear or flexural failure do not arise at the bolt head in response to local

ground instability. Similar factors on loads and capacity should be used for this failure mode as for the general case of flexural or shear failure of the lining between the bolts. Use of spider bar or handlebar bolt plates normally assist in the load transfer at the bolt head.

Profile control

Where the structural design of a shotcrete lining relies on a hoop compression system or a compressive membrane action, consideration must be given to achieving the approximate shape that the design relies upon with certain limits for geometric imperfections. Shape imperfections can substantially add to the liner reaction forces and hence must be considered by the design. This issue becomes less significant as the shotcrete lining thickness increases or where shape templates such as lattice girders or steel sets are used (Proctor & White, 1977). Acceptable tolerances on geometric imperfections should be considered and specified by the designer.

Delamination within linings

Shotcrete arch linings are often required to be built up in multiple layers. Where composite action is required in the design, consideration must be given to the potential risk of delamination which can occur within or between individual shotcrete layers as discussed in Chapter 12. Mitigation strategies may include: the use of lattice girders or steel sets, bar/mesh reinforcement, sequence and timing between subsequent layer applications, surface preparation and careful control of accelerator dosages at the nozzle.

3.4.2.5 ***Material Parameters***

The material properties discussed in Chapter 5 of this guide also apply to tunnels. Specific performance requirements to achieve the functional requirements of a project must be defined by the Designer of the tunnel. For permanent shotcrete often used in civil tunnel applications the following additional parameters must be considered:

- Exposure class – exposure classification of a member determined in accordance with Cl. 4.3 of AS 5100.5.
- Permeability tests to EN 12390-8 for the corresponding exposure class specified by the Designer.
- Proportioning for Durability – includes any specific mix proportioning requirements to meet the specified service life of the functional requirements.
- Smoothing layer – definition of grading limits and strength requirements for smoothing layer where smoothing layers are used e.g. as a substrate for a spray applied waterproofing membrane.
- Early strength gain and minimum requirements to permit re-entry must be specified by the design – refer to Section 3.4.2.4.1.
- Crack widths – allowable crack widths can affect the design approach and are normally set by the client as a performance criterion – refer to Section 3.4.2.4.2.
- Fibre types (described in Section 6.11).

3.4.2.5.1 *Early-age Strength*

As discussed in Chapter 5, shotcrete for ground support is often required to achieve a minimum strength at an early age – often within the first few hours after spraying. This is required mainly due to safety requirements related to safe re-entry and its effect on excavation and support cycles.

The requirement for early age strength is typically defined for a period between 10 minutes to 24 hours after spraying and is normally classified as early strength classes J1, J2 or J3 in accordance with EN 14487-1. These classes also provide an estimate of hardening rate for the shotcrete that can be used in design and its impact on excavation and support cycles. Further discussion on each strength class may be found in the Austrian Sprayed Concrete Guideline (OBV, 2013).

Early age strength is often used as a crude indicator of early age adhesion and shear capacities which are then used to demonstrate that the shotcrete is capable of supporting some small rock wedge loads allowing for man-entry. Although the early age strength required may vary depending on rock type and project requirements, an absolute minimum value adopted is a compressive strength of 1 MPa indicating that the shotcrete is essentially self-supporting (Bernard, 2011). When the shotcrete has achieved this strength, experience has demonstrated that fall-out is unlikely, and some very minor adhesion and shear capacity has been achieved. The minimum requirements for safe re-entry must be specified by the Designer and are dependent on ground conditions and support systems.

Early age strength is often achieved using accelerators. It should be noted, however, that a

balance between high early age strength and long-term performance is needed. For this reason, accelerator dosage is often kept below 8%. Although higher accelerator dosage could allow for higher early strength gains, it may have detrimental effects on shrinkage cracking and later-age strength gains. Early age strength can be assessed by a number of means as described in Chapter 14, Test Methods.

3.4.2.5.2 *Crack Width and Crack Control*

It is practically impossible to prevent cracking of shotcrete. As such, the design crack width is an input into analytical shotcrete design methods such as those identified in Section 3.3. The design crack width is often set by the client as a performance criterion and is largely dependent on durability requirements. Research has shown that cracks on the surface greater than 0.1 mm in width may result in long term corrosion of fibres within the cracks (Nordstrom, 2016; Bernard, 2020) and in turn a loss of flexural strength, toughness, ductility and redundancy in the long term. However, as it may be impractical to design a structure to very narrow flexural crack widths, typical approaches utilise wider allowable crack widths in conjunction with a sacrificial thickness.

Once the design approach is established, an appropriate mix design and construction method need to be developed that considers the allowable crack width requirements. This may include measures to improve shrinkage control such as controlled curing methods, controlled shotcrete application, sequencing and timing of application, appropriate fibre reinforcement and limiting set accelerator dosages.

Notwithstanding the design and construction controls that are used for crack control, cracking may still occur, mainly from sloughing or sagging of the young shotcrete, shrinkage, or structural loading. The first two causes can be mitigated by careful spraying and limiting the maximum thickness of lining sprayed in each pass, coupled with good mix design. The ground must also be moist prior to spraying, since a dry substrate may suck moisture from the fresh shotcrete exacerbating the propensity for shrinkage. Structural cracking is generally avoided by design considering appropriate, conservative ground conditions. Structural cracks may be caused by localised higher than expected in-situ stress or inappropriate ground assessment. In the long term, structural cracks could occur due to modified ground loading conditions.

Both shrinkage and structural cracks are most commonly noticed when they are associated with points of water ingress. Not only will the crack allow water to percolate through the lining, but the water is likely to cause corrosion of steel bar or steel fibre reinforcement as it percolates through. This is particularly problematic if the water contains chloride-based salts. Any salt contaminant in the water can also lead to salt crystallisation damage at drying surfaces around the point of water ingress. If the crack is small, there is likely to be little more than a moist patch on the surface of the lining. If this seepage persists over several years, such patches can also lead to salt crystallisation at the surface and delamination of small pieces of shotcrete. Water ingress can also lead to slime and mould formation both on the lining and roadway in the tunnel. This can produce slippery surfaces and stalagmites. These can be safety hazards for traffic within the tunnel and these cracks must be repaired. Repair methods are described in Section 3.6.

Cracks are also likely to occur in unsupported areas of a lining, such as areas spanning strip drains and delaminated areas. This is because such areas lack continuous restraint on the back side of the lining compared to adjacent areas and instead are restrained only at the edges. The typical outcome is a crack down the centre of a covered strip drain or delaminated area. Such cracks tend to be particularly wide and will likely pass all the way through the lining. If water percolates through such cracks, the reinforcement is highly likely to corrode, leading to the formation of a structural discontinuity over time. Measures to avoid such cracks include: limiting the width of strip drains, ensuring a minimum cover thickness is achieved over the strip drains, and potentially including mesh reinforcement within the lining over the strip drains or areas anticipated to be prone to delamination or cracking. Convergence may cause cracks to widen or close up with the passage of time depending on the geometry of the lining and redistribution of in situ stresses in the rock mass.

3.5 QUALITY CONTROL AND COMPLIANCE

As with any engineered structure it is essential that the quality control, inspection and testing of the built product is undertaken to satisfy the design requirements and ensure assumptions are met. The constituent and physical parameters of shotcrete

relevant to tunnel lining performance are covered in Part 3.4.2 above. Prescription of the required shotcrete material performance should be established by the tunnel designer via their design documentation to enable verification of the design requirements during construction.

Relevant items to be addressed for tunnel shotcrete linings include:

1. Constituent material and mix design requirements.
2. Physical properties of the hardened shotcrete with reference to relevant test standards.
3. Pre-production testing requirements to establish compliant shotcrete mixes prior to construction.
4. Production testing requirements to validate nominated material performance criteria are met by construction.
5. Method and competency requirements in order to guide good workmanship and practice likely to achieve consistent and compliant quality and testing.
6. Monitoring requirements to ensure validation of assumed design conditions (geological parameters, ground modelling, etc).

A quality control system complying with ISO 9001 is typically implemented for the design and construction phase of the project. The implemented quality system should cover training and competency of personnel, requirements for engineering supervision, and the implementation of an inspection and test regime. An important element of the quality system is the procedure for identifying and addressing non-conformances with the design requirements.

3.5.1 Typical Material Requirements

Typical prescribed performance properties for shotcrete in tunnel linings include the following (Table 3.1). The list is limited to tunnel structural design parameters. Other material requirements may be useful for constructability and aesthetic purposes.

Material constituents within the shotcrete

Table 3.1: *Typical prescribed performance properties for shotcrete in tunnel linings*

Property	Test Method	Common Range
Compressive strength	AS 1012	32–50 MPa
Early age compressive strength gain	Beam end test, Needle penetration (ASTM C-116)	As defined by design to suit safety and constructions staging
Peak flexural strength	BS EN 14651 or ASTM C1609	4–5 MPa
Residual (post crack) flexural strength	BS EN 14651 or ASTM C1609	2–3.5 MPa
Toughness	ASTM C 1550	@ 5 mm: 60–100 J @ 40 mm: 300–500 J
Permeability	EN 12390-8	25 mm for permanent linings dependent on waterproofing strategy and exposure conditions
Relative Density (sprayed shotcrete product to concrete base mix)	AS 1012.12	Between 95–98% of base mix derived from field trials and a minimum of 2250 kg/m^3
Shrinkage	AS 1012.13	Subject to exposure class typically between 700–800 microstrains @ 56 days
Fire testing	Dependent on the design standard of fire protection applicable	EFNARC Specification and Guidelines for Testing of Passive Fire Protection for Concrete Tunnels Linings is commonly applied for permanent linings in transport tunnels
Bond strength (adhesion to substrate)	BS EN 1542/ EFNARC 1996	Dependent on substrate and the design basis. From 0 MPa in thinly laminated or weathered rock to 0.5 MPa in fair to good quality rock at 28 days

are covered in Chapter 5 of this guide. High quality mix designs should be developed and approved by experienced shotcrete professionals prior to pre-production trials commencing.

Pre-production trials should be undertaken to demonstrate the suitability and compliance of the shotcrete mix prior to approval for use in the works. Both the base concrete mix without admixtures and the sprayed shotcrete product should be tested for comparison. Shotcrete trials should use the exact constituents (including admixtures and accelerators) which will be used in construction. Any change in constituents during production should be subject to a re-trial with that mixture. Pre-production testing of the sprayed shotcrete product should be undertaken using similar equipment to that intended for use in the works.

During project definition and scoping the requirements for testing should be carefully considered including the following:

- Responsibility for supervision of testing and sampling.
- Responsibility for sample custody.
- Rights and controls of the test data (contractor, owner, etc).

Samples of sprayed shotcrete for both pre-construction and production testing should be cut/cored from panels sprayed at a representative orientation of the work to be undertaken (typically in a sub-vertical orientation as safe overhead spraying of panels is challenging). Spraying and sampling should be a controlled process to ensure that personnel, materials, additives (including accelerator) and methods are identical to those used during regular production.

For trial mix acceptance the parameters must be assessed using the characteristic values in accordance with the design codes adopted. Adequate numbers of samples should be prepared during trials to give meaningful statistical results for the product being assessed and some margin allowed for trial testing relative to the minimum performance requirements which are required during production.

Testing during production should be undertaken at an adequate frequency and sample size to give a good representation of the daily production in the works. If there are multiple sites on a large project, production testing should be undertaken from each site. Testing frequencies for tunnel projects often follow the guidance of the BTS/ICE Tunnel Specification (2010). Test frequencies should be adapted for the size of project. Smaller projects or elements generally need higher testing frequency to ensure an adequate statistically valid set of samples are taken to verify performance. The testing frequency is often gradually reduced on larger projects after ongoing reliable compliance has been demonstrated across all sites and production crews.

Consideration should be given to additional samples being taken for testing at 56 and 90 days to check for embrittlement with age, and to assist with resolving non-compliances at the standard 28-days testing.

3.5.2 **Resolving Non-compliance**

Some non-conforming material test results or quality of the placed shotcrete (NCR's) inevitably arise on large projects. NCR's commonly encountered for shotcrete linings include:

- Inadequate lining thickness.
- High or low compressive strength.
- Insufficient residual flexural strength or toughness.
- Inadequate adhesion.
- Fall-outs.
- Excessive cracking and exceedance of specified crack width limits.
- Sagging.
- Seepage/wet zones through the lining.
- Encroachment within the required clearance profile.

In the above cases, solutions may include individual measures or combinations of the following remedies:

- Removal by milling, re-spraying or applying additional shotcrete layers where clearance allows.
- Supplementary support by other means, such as pinning or rock bolting.
- Coatings or injections in the case of cracking.
- Drainage, permeation grouting, or waterproofing measures to collect or control incoming water seepage.
- Design analysis to re-evaluate the actual support conditions and re-assess the installed lining loads and capacity.

3.5.3 Construction Monitoring

Tunnel design and construction must include validation of the assumed ground conditions and installed support behaviour during construction and during the service life of the tunnel. As part of the design of the tunnel, a system for monitoring and validating the performance of the tunnel lining shall be defined. Instrumentation of the tunnel lining and surrounding ground should be defined by the designer and may include:

- Profile control.
- Validation of thickness.
- Convergence (tunnel deformation) monitoring.
- Load cells and strain gauges within critical support elements.
- Crack mapping.

Contemporary tunnel practice in Australia, as mandated by local and international tunnel and safety guides and codes, is to implement regular (for example daily) reviews of the installed tunnel support, monitoring system results and geological mapping. The information is commonly reviewed and recorded in the form of a review meeting record (e.g. “Permit to Tunnel” meeting). The meeting should be attended by key controllers of the tunnelling works such as the superintendent, contractor’s engineer, geologist and a representative of the designer. The meeting records any required safety/support actions and the anticipated conditions and acceptable progress for the upcoming period.

Mapping of the ground by geological face mapping where possible, and/or by other geophysical and observational means, is a mandatory part of tunnel construction. Where cracking or other indications of excessive strain is observable in the shotcrete lining or other elements, cracks should be regularly mapped and monitored. The tunnel design should clearly state what geological conditions the support design is intended for and what anticipated and allowable instrumentation deformations/measurements are anticipated by the design.

3.6 MAINTENANCE AND REPAIR

3.6.1 General

This section refers to maintenance and repair of shotcrete that does not achieve design requirements. It does not discuss using shotcrete for repair or restoration of concrete structures. For use of shotcrete as a method of concrete repair or restoration, refer to Chapter 12.

Permanent shotcrete linings are typically intended to be maintenance-free (as low as reasonably practicable), however unexpected events may result in some maintenance requirements throughout the design life. Identification of maintenance and repair is typically via regular inspections or inspections following an unexpected event, such as a collision, fire or earthquake.

3.6.2 Inspection Regimes

Shotcrete linings are typically frequently inspected during construction and where required, repairs are undertaken before construction is completed. Often, the lining is inspected before mechanical equipment is installed as repairs after M&E completion can be extremely difficult to undertake.

Designers typically require shotcrete to be visually inspected at annual intervals throughout operation and more detailed inspection every 5 to 10 years. The annual inspection is normally a visual walk through, but also could include LIDAR or photogrammetry scans. The detailed inspection may also include checks on critical design criteria such as groundwater ingress, adhesion, crack widths, and concrete deterioration.

3.6.3 Repair of Defects that Affect Long-term Performance

Experience in some recently constructed tunnels has shown that the primary problems afflicting permanent shotcrete linings in the long term tend to be delamination from the substrate for very thin linings (<75 mm thickness), cracking, both structural and shrinkage related degradation of the concrete matrix and embrittlement. Some of these are inter-related and frequently arise in association with points of water ingress. Other long-term problems include degradation of the ground behind the lining, normally caused by localised stress relief and/or groundwater, which may result in a change in loading conditions and hence stability and a requirement for increased support. This may be manifested as local deformation of the lining and in some isolated instances has led to local fall-outs.

3.6.3.1 *Delamination*

Mechanisms resulting in delamination of a lining are discussed in Chapter 12. Delamination is a significant problem if the design assumes that adhesion or bond between shotcrete and the substrate exists. Ideally, to ensure sufficient redundancy in the design, shotcrete linings in tunnels should assume there is no adhesion or bond in the long term and hence rely on flexural strength as a minimum. Assuming there is some reliance on bond, it is not possible to restore the bond between a lining and substrate once lost. The most common and effective action is to install additional bolts over the shotcrete lining thereby reducing the effective span for the shotcrete lining. This will reduce the flexural loading on the lining. If the bolt is sufficiently sized, it may also enhance or restore local stability to the underlying ground. The spacing, length and other bolt details need to be assessed by a competent designer.

3.6.3.2 *Cracking*

A common problem with shotcrete linings is cracking. Control of cracking is discussed in more detail in Section 4.2.4.2. This section deals with repairs should cracking greater than design allowances occur. The type of repair is a function of the crack width and importance of the cracking to the structure.

Where cracks are small, but seep water, in the short term, temporary measures could include installing drains to collect and divert the water. For long term safety and durability of the shotcrete liner, the durability and strength of the shotcrete lining needs to be reassessed and permanent repair solutions implemented such as additional shotcrete cover to drains and the cracked area, along with additional bolts if delamination is an issue.

Where cracks do not require additional ground water control measures, the width of a crack generally dictates the repair method. Cracks smaller than around 0.15 to 0.2 mm in width typically do not need to be repaired and often seal via autogenous healing. As they may result in damp patches, they need to be regularly monitored to ensure they heal and do not widen or result in drips and hence potential long-term durability concerns. Cracks between 0.2 mm and 2 mm in width can generally be sealed using epoxy fillers. However, sealing or filling cracks may result in groundwater finding another path into the tunnel, which in turn needs to be sealed or filled. In areas where shotcrete repairs are required and groundwater is difficult to manage, groundwater may need to be controlled by other means such as use of grouting techniques, or channelling groundwater into a drainage system via weep holes.

With the exception of compressive action, the structural capacity of cracks cannot be fully reinstated by injecting fillers. In particular, the flexural capacity of the lining is unlikely to be restored using fillers. If the crack is caused by shrinkage, aggregate interlock may be compromised causing loss of shear capacity. Repairs may not restore this capacity. If a lining is reinforced with macro-synthetic fibres, the crack will not cause a loss of post-crack flexural capacity. If cracks have not been repaired in a timely manner, there may be reduced strength and durability in the area of cracking. Where cracks affect the structural integrity and ductility of a structure, possible remediation measures could include meshing over the shotcrete, installation of additional bolts, application of additional shotcrete to the surface, or replacement of the lining. Repairs are typically substantial in nature and may require temporary measures to ensure safety to both tunnel users and repairers.

If cracks are considered aesthetically unacceptable, then fillers are likely to make the appearance worse and should be painted or sprayed to improve the appearance. If cracks cause curling and de-bonding of lining, then extra bolts may be required to pin the lining in place.

The only effective means of restoring full structural capacity is to demolish the lining and re-spray. Alternately, assume the damaged lining to be structurally ineffective and spray a new structural lining over the top of the degraded lining.

3.6.4 Repairs Following Major Damage Events

Major damage events include fire, earthquakes, blasts and some major collisions. If these events occur, there will generally be an overriding operational imperative to open the tunnel as soon as practical. To achieve this, an assessment of damage needs to be undertaken as soon as practical after the event. This assessment needs to determine both temporary repair methods to enable the tunnel to operate safely while long-term permanent repair methods are implemented to restore the structure to the pre-event condition.

Temporary repair methods typically include removal of unsafe shotcrete linings and substrate and the installation of temporary groundwater control measures then mesh and rock bolts. Permanent repairs may take considerable time as they typically have to be undertaken in very limited shutdown periods. They will typically involve complete replacement of the shotcrete lining and associated groundwater control system.

4

Design Considerations in Mining

The majority of shotcrete used in mines is required for ground control. The design life for this type of support ranges from a few weeks to 50+ years. Shotcrete is also used for applications ranging from ore-pass and drain construction, backfill barricades to reinforcing impact zones and constructing plugs for flood control or barriers for ventilation purposes. Requirements placed on shotcrete used in mines therefore vary significantly. The overall approach to the design of shotcrete structures in mines resembles the approach used for civil tunnels and above ground structures and involves consideration of stability, strength, serviceability, durability, and occasional other design requirements such as impact and wear resistance, and water penetration. All of these parameters are utilised with a major cost consideration to arrive at the most economical result.

4.1 DESIGN CONSIDERATIONS FOR BASIC PROPERTIES

4.1.1 Design for Strength in Mining

The intended use of shotcrete will determine the performance requirements that the shotcrete must achieve. This can vary from a full structural support role through to non-loadbearing uses such as a superficial sealing layer. This Section covers design for strength of load bearing shotcrete. It must be appreciated that interactions between shotcrete and the loads and materials it supports can be very complex and in many cases are presently incapable of being satisfactorily modelled or analysed. For this reason, various simplified analytical methods or empirical approaches to design for strength have been developed. However, the common aim of all design methods is to achieve a load resistance that exceeds the potential imposed load actions by a suitable margin. Unfortunately, estimating the loads that impinge on shotcrete linings is very difficult, thus one side of the "load and resistance" approach to design is subject to a high degree of uncertainty. That is why observational approaches to lining design such as the Q-system are very effective in mining, given that modifications are made to lining geometry and FRS properties in response to the performance observed.

The two most common approaches to strength design are analytical and the empirical. The analytical approach involves a rationalisation of potential load actions and the corresponding load resistance of the structural system. The empirical approach involves the use of a documented body of past experience relevant to the specific application and prevailing conditions to derive a satisfactory structural system.

In applications involving shotcrete interaction with the excavated rock, due to the complexity of structural behaviour and the potentially high level of variability in design parameters, it is good practice to monitor the performance of a shotcrete-based structural system until satisfactory performance has been confirmed. Of course, this is not possible when there is a need for a support system that can be applied immediately in a greenfield mine development with no history of shotcrete performance. In such cases, the typical approach is to use a mix design that has been successfully used in a similar mining environment.

Where adhesion to the substrate is required as part of a structural system, the potential for loss of adhesion is reduced by suitable substrate preparation and by limiting shrinkage and creep. In general, it is not recommended that adhesion between shotcrete and a substrate consisting of either hard or soft ground be relied upon in the long term for structural capacity. A long-term connection between lining and substrate can be provided separately through the use of anchoring systems.

4.1.2 Design for Durability in Mining

The environmental conditions prevalent in some mines are among the most severe in existence anywhere. The dissolved salt content in many mines, and acidity of ground water associated with volcanic sulphides in particular, can be extremely aggressive toward cementitious materials and steel reinforcement. For these reasons, the durability requirements for the shotcrete matrix may require special attention by controlling the mix design of the concrete matrix through such measures as limiting the maximum w/c ratio or limiting the total content of calcium aluminate depending on the exposure conditions expected (see AS 3600).

Durability requirements for steel reinforcement in underground environments are normally satisfied by limiting in-service crack widths to 0.15 mm and ensuring the concrete matrix meets AS 3600 requirements for the appropriate exposure class. Maximum acceptable in-service crack widths for shotcrete reinforced with synthetic fibre reinforcement may be much larger than is required for steel reinforcement. In extremely aggressive environments, concrete specialists should be consulted for advice on providing mix designs that can resist highly acidic conditions.

4.1.3 Design for Other Requirements

The principal design criteria with respect to the shotcrete matrix in mines are strength gain with time, toughness, water permeability and durability. Less commonly considered design criteria can include abrasion resistance and impact resistance. Careful consideration should be given to the fact that all properties of the shotcrete matrix are interdependent and certain performance requirements may be incompatible.

4.2 DESIGN CONSIDERATIONS FOR REINFORCEMENT

4.2.1 General

There are three approaches to reinforcement used in shotcrete structures:

- Unreinforced.
- Conventionally reinforced with mesh or bars.
- Fibre-reinforced.

4.2.2 Unreinforced Shotcrete

As the rock conditions vary over time in most mines and the openings are subject to deformation or cycles of loading and unloading, application of unreinforced shotcrete is uncommon. In mining applications where it can be confidently forecast that the shotcrete will be subjected to exclusively compressive load actions, or no-load actions, it may be possible to remove the need for reinforcement. An example may include thick plugs for flood control. However, such structural systems will exhibit very low tensile strength and ductility and thus are exposed to the risk of failure from the potential development of tensile load actions. It is also rare to have compressive load without tensile loading, especially in the roof.

4.2.3 Conventional Reinforcement

Conventional reinforcement used in mines comprises continuous elements such as steel bars, mesh and welded wire fabric. Provided effective encapsulation of the reinforcement with shotcrete of suitable quality is achieved, conventionally reinforced shotcrete elements can be designed in accordance with AS 3600. To ensure effective encapsulation is achieved, appropriate detailing and fixing of reinforcement, and correct shotcrete placement technique, are crucial.

Rock bolts often introduce a large point load to a shotcrete lining that may need to be anchored to the lining using reinforcement. These forces can be distributed into the lining more effectively if a suitable rock bolt plate or series of radiating reinforcement bars (sometimes called a “spider” or “handle bar”) is used at the end of the bolt. The spider should always be buried within a fibre reinforced shotcrete lining. The plate should be external to the structural layer of shotcrete to be effective and may be covered with fibre reinforced or non-structural shotcrete for protection.

4.2.4 Fibre Reinforcement

Fibre reinforcement comprises short discrete elements distributed uniformly through the body of the shotcrete. The individual fibres are typically made of either steel or polymers, although specialist applications have used Alkali Resistant glass or basalt. Polymer fibres added for reinforcement are defined as macro synthetic fibres and should not be confused with the fibres that can be introduced to shotcrete for reasons other than structural reinforcement, such as control of rebound, plastic shrinkage, and enhancing fire resistance. These non-structural fibres are defined as micro fibres. For fire resistance the fibres are comprised of fine monofilaments of propylene.

The structural role of fibre reinforcement in shotcrete is to provide toughness (post-crack load capacity). They are not included to increase the tensile or flexural strength of the uncracked concrete matrix. Toughness describes the ability of fibre-reinforced shotcrete to sustain and potentially redistribute load actions after cracking. In deterministic design, the shotcrete structural system is ideally designed not to crack. However, due to the complexity and indeterminate nature of some structural systems, especially when ground support in mining is involved, there remains the potential for an under-estimation

of load actions for which post-crack load capacity is crucial to maintaining overall safety and serviceability.

Toughness is quantified in terms of post-crack load-carrying capacity or energy absorption, which is assessed using beam or panel test specimens. Measures of post-crack load capacity derived from beam and panel specimens are used to quantify the ability of a cracked fibre reinforced shotcrete structural system to support load actions.

Guidance on a toughness value to specify for mining applications can be obtained from various geotechnical design tools, as referenced in Clauses 4.3, 5.5 and 14.8.

4.3 DESIGN CONSIDERATIONS FOR UNDERGROUND METALLIFEROUS MINING

4.3.1 Design for Strength

The type of ground support needed for a particular location in a mine is dependent on several factors including:

- geometry of the excavation
- blasting practices
- rock mass strength
- induced stresses, and
- the weathering process.

In most mining operations, the ground support design is based on previous experience and evolves over a number of years (Brown, 2004). In many instances there may be nothing technically wrong with the designs and the performance can be assessed to be suitable. However, rock mass conditions usually change with time (for example, stresses increase as the depth of mining increases and when the global extraction increases) and accordingly ground support performance may change and become unacceptable (Villaescusa et al., 2014).

As most mines experience some degree of deformation or relaxation of the underground excavations over the life of the mine or even as soon as drives are developed, it is essential to also take into account the cycle of loading/unloading that shotcrete must accommodate.

Shotcrete can be used for additional support of wedges in blocky ground and can be very effective if applied correctly. This is because the base of a typical wedge has a large perimeter and hence, even for a relatively thin layer of shotcrete, a significant cross-sectional area of the material has to be punched through before the wedge can fail (Hoek, 2007).



Figure 4.1: *Ravelling of small wedges in a closely jointed rock mass. Shotcrete can provide effective support in such rock masses*

The ideal application for shotcrete is in closely jointed rock masses such as that illustrated in Figure 4.1. In such cases (without shotcrete applied), wedge failure would occur as a progressive process, starting with smaller wedges exposed at the excavation surface and gradually working its way back into the rock mass. In these circumstances, shotcrete provides very effective support (Hoek, 2007).

The mining industry has traditionally used empirical methods supported by some form of rock-mass classification to design ground support systems. Rock-mass classification systems have been used to group areas of similar geomechanical characteristics, to provide guidelines for stability performance and to select appropriate support. Examples of commonly used systems are:

- The NGI Q-System (updated NGI, 2015).
- Q-system (Grimstad & Barton, 1993).
- RMR system (Bieniawski, 1973).
- New Austrian Tunnelling Method (NATM).
- Ground Characteristics Curve Method (Brady & Brown, 1985).

Both the Q and RMR classification systems are based on a rating of three principal properties of a rock mass:

- The intact rock strength.
- The frictional properties of discontinuities.
- The geometry of intact blocks of rock defined by the discontinuities.

The NGI Q-system was developed at NGI between 1971 and 1974 (Barton et al., 1974) since the

introduction of the Q system in 1974 there has been considerable development within support philosophy and technology in underground excavations. Several new types of rock bolts have been introduced, and the continuous development of fibre reinforced technology has in many ways changed the support procedure. Application of sprayed concrete has gained acceptance even for good quality rock masses due to demands for a higher level of safety during the recent years. Two revisions of the support chart were carried out and published in conference proceedings in 1993 and again in 2002. NGI has continuously improved and updated the system and produced the Q-system handbook in 2012 as a summary of NGI's best practice. The 2015 edition of the Q-system handbook includes NGI developments and experience gained since the publication of the first edition (NGI, 2015).

The NGI Q-system is a classification system for rock masses with respect to stability of underground openings and is based on the estimation of six rock mass parameters:

The Q value gives a description of the rock mass stability of an underground opening in jointed rock masses. High Q values indicate good stability and low values means poor stability.

$$Q = \frac{RQD}{J_n} \times \frac{J_r}{J_a} \times \frac{J_w}{SRF}$$

- *RQD* = Degree of Jointing (Rock Quality Designation)
- *Jn* = Joint Set Number
- *Jr* = Joint Roughness Number
- *Ja* = Joint Alteration Number
- *Jw* = Joint Water Reduction Factor
- *SRF* = Stress Reduction Factor.

The latest rock support chart published in 2015 is shown in Figure 4.3. The support chart is not divided into definite support classes but shown as a continuous scale both for bolt spacing and thickness of shotcrete. The energy absorption is expressed for EN 14488.5 square panels at 25 mm deflection. Suitable values of energy absorption for ASTM C1550 round panels at 40 mm can be found by dividing the values in the figure by 2.5 (Bernard, 2002).

The main advantage of the Q classification system is that it is relatively sensitive to minor variations in rock properties. The descriptions used to assess joint conditions are relatively rigorous and leave less room for subjectivity, compared to other rock-mass classification systems. One disadvantage of the Q system is that it is relatively difficult for inexperienced users to apply (Milne et al., 1998). Other authors have noted that the Q system is an expert system and that shotcrete design must be determined by a geotechnical or otherwise suitably experienced engineer. It has been noted:

"The use of the Q-system, and also other classification systems, requires in addition to a general understanding of rock engineering, also good knowledge about the basis, the structure and the limitations for their use. It is important that the user knows the premises for the Q-system and that he or she has the necessary understanding and experience to measure relevant values of the appropriate parameters" (Palmstrom & Broch, 2006).

Despite the limitations of such expert systems for support design, Potvin & Hadjigeorgiou (2015) noted that the majority of Australian and Canadian underground hard rock mines rely on the Norwegian Method of Tunnelling ground support recommendations (the Q system) for preliminary design recommendations. This is the case during the pre-feasibility and feasibility stages where the Q-system is used to select the support standards. This is usually accompanied by a limit equilibrium wedge analysis and rules of thumb (Potvin & Hadjigeorgiou, 2015). The authors further noted that new empirical ground support design guidelines for underground mine drives are required and that the development of ground support recommendations based on the Q-system is expected to continue to evolve to reflect the rock reinforcement and surface support tools accessible and employed at mine sites. The focus on joint properties in the rock mass classification systems reinforces the general principle that the shotcrete does not have to be as strong as the rock, only stronger than the weaknesses in the rock (after Simser, 2014). Average shotcrete strengths in situ are around 32–40 MPa, well below average rock strengths.

Numerical modelling for shotcrete design in underground mines is much more challenging than in civil tunnelling and as such is not widely applied. In the thesis by Sjolander, the author notes the following:

"First of all the type and magnitude of loads acting on the lining must be determined. This depends on the interaction between shotcrete and rock as well as the quality of the rock and must be determined for each tunnel or even for specific parts of the tunnel. Secondly, (mining) tunnels are today commonly

constructed by drill and blast which inevitably creates an irregular rock surface. The actual thickness of the applied shotcrete is difficult to determine without destructive testing and measured in situ thickness shows great local variations" (Sjolander, 2017).

Mine designs for support with shotcrete tend to differ from tunnel design approaches as the excavation's orientation, depth and stress conditions can vary throughout an underground mine and over the life of the operation. For mining excavations where the shotcrete may be subjected to high stresses, squeezing ground or dynamic loading, the design must take a system-based approach where the ground support system must be able to absorb energy by yielding through large displacements while maintaining support capacity (Raffaldi et al., 2017). In such environments, the overall system design will likely incorporate a combination of two or more support elements such as fibre reinforced shotcrete, rockbolts, mesh, cablebolts, lattice girders or steel sets, as the shotcrete alone is unlikely to handle deformation beyond 50 mm or high energy dynamic events.

Shotcrete can be perceived as not being able to manage dynamic loads due to its relatively high stiffness and its fundamentally brittle behaviour (Morissette et al., 2014). This results in the development of cracks in shotcrete under high static and dynamic loads, when a sudden load is applied over a very short time. The limitation of shotcrete in deep and high stress environments has been documented by Counter (2012). Nevertheless, shotcrete is capable of keeping the ground tight by limiting rock mass dilation as opposed to mesh, which is purely passive. As a result, shotcrete is capable, to a certain extent, of preserving a laminated beam and maintaining confinement around reinforcement elements (Simser, 2014). Recently, some high stress mines have adopted a mesh-over-shotcrete approach in order to better manage dynamic loads (Punkkinen & Mamidi, 2010; Counter, 2012; Simser, 2014). Such a combination approach allows the shotcrete to keep the ground tight whereas the mesh can better absorb high levels of kinetic energy and accommodate larger deformations. Holding the ground together and preventing ejection of fly rock or shotcrete particles during a dynamic event is critical even though the rock immediately adjacent to an opening itself may be broken and it is here where the combination of fibre reinforced shotcrete, suitably embedded rock anchors, and mesh works well.

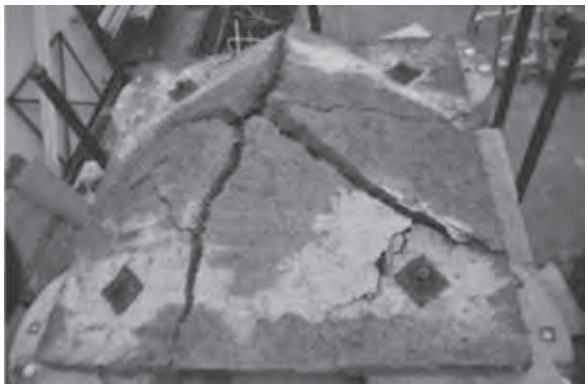

Figure 4.2: *Post-test condition of fibre and chain-link reinforced shotcrete panel (from Raffaldi et al., 2017)*

Fibre reinforced shotcrete enhances the overall system through initial rupture strength and post-crack toughness and then, despite cracking into larger plates, appears to work as a composite system when combined with steel mesh and bolts (Figure 4.2). Energy absorption can also be enhanced with other support elements such as steel straps, high tensile mesh straps, yielding bolts and diamond weave mesh. Note, however, that ground support linings that have been subjected to a dynamic event must be rehabilitated to bring the system back up to the originally designed capacity.

It must be emphasised that support system design for high stress, squeezing ground or dynamic loading conditions will be location specific and must be determined by a geotechnical or otherwise suitably experienced engineer with site knowledge.

The use of the Q classification system (and also other classification systems) can be of considerable benefit during the feasibility and preliminary design stages of a project, when very little detailed information on the rock mass and its stress and hydrologic characteristics is available. However, due to the variance in the many factors listed above, it is recommended that a geotechnical consultant or engineer should assess the influence of any measured or estimated stress, structure, joint characteristics, and predicted displacements or deformations on the shotcrete over time.

Substrate preparation

Shotcrete performance can be significantly affected by the quality of substrate preparation in mining environments. Broad considerations are surface cleanliness, surface moisture or dryness, water flows, joint infill material, etc. Refer to Clause 12.5.1 for Substrate Preparation.

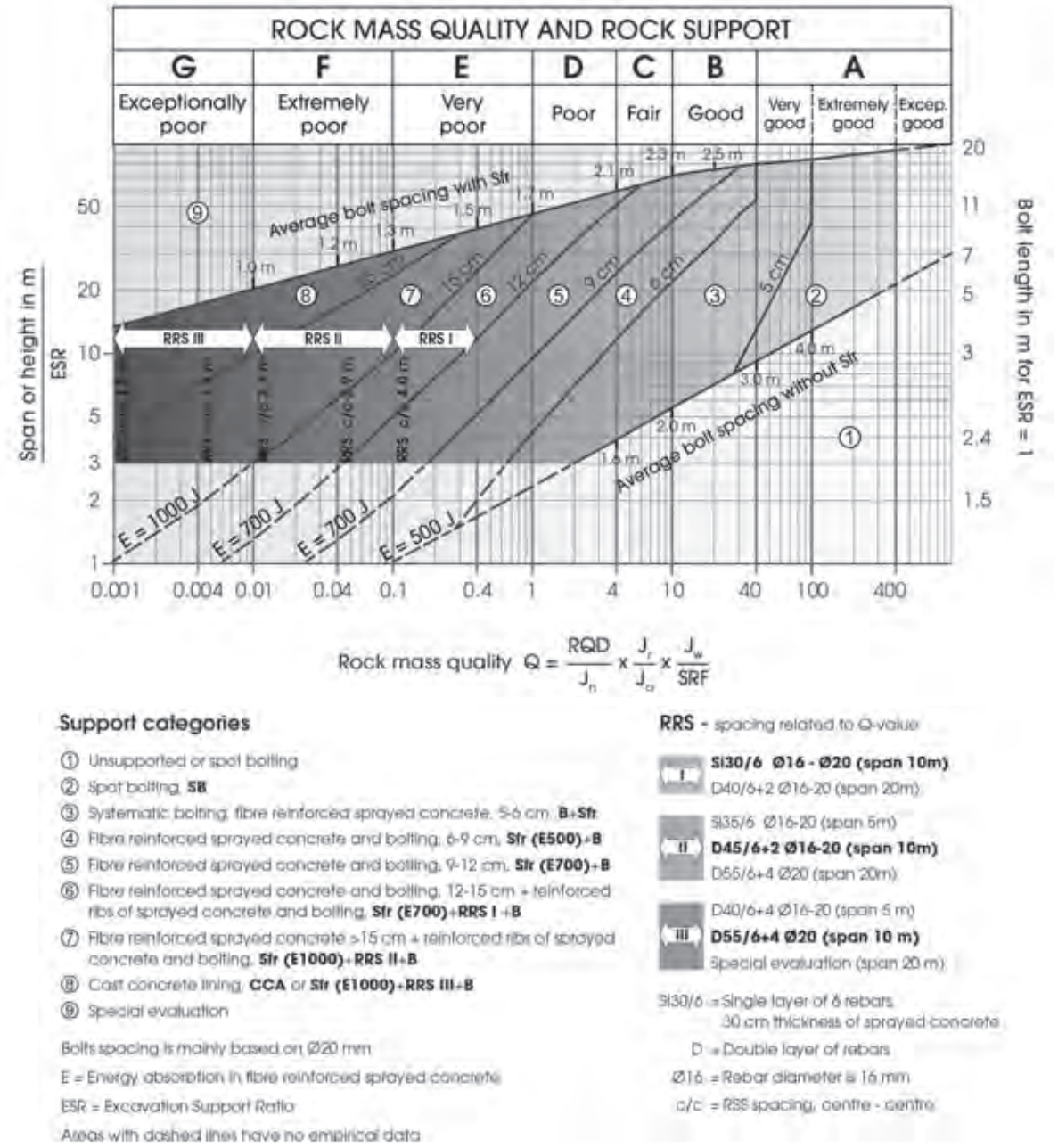

Figure 4.3: *Permanent support recommendations based on Q-values and span/ESR* (NGI, 2015)

Interaction with other ground support elements

When designing the shotcrete, possible interaction with other support elements such as rock bolts, mesh, bars, straps, arches, and plates must be considered. A geotechnical consultant or engineer should examine and specify these requirements.

4.3.2 **Design for Serviceability**

Ground water flows

Excessive ground water flows can affect the shotcrete bond to the substrate and the ultimate performance due to excessive water pressure build up behind the shotcrete. Refer to Clause 12.5.1.1 for suggested techniques to mitigate the risks associated with ground water.

Surface finish requirements

A smooth finish may be required for aesthetic reasons, to lower surface roughness and abrasiveness or to improve ventilation and improve fluid flow. Smooth finishes may also be specified for safety purposes in workshops, car parks, crib rooms or areas where humans or machinery may come into contact. See Chapter 8 for information about surface finishes.

4.3.3 **Design for Durability**

Excavation life expectancy

The shotcrete design must consider the required longevity of use in the tunnel, chamber, shaft, ore pass, or other excavation.

Abrasion and impact

In applications where the shotcrete is subjected to wear and tear from rock flows, the abrasion and impact resistant properties may need to be enhanced through the use of higher-toughness shotcrete or through the addition of specialised materials such as corundum and iron.

Temperature and humidity

Mines can have very dry environments with high airflows and temperatures that can cause plastic and/or drying shrinkage cracking. This factor should be evaluated in the design and consideration given to curing. Refer to Clause 12.7.



Figure 4.4: *In-cycle shotcreting example*

Embrittlement

The toughness of FRS changes with age and, under certain circumstances (particularly for a very strong concrete matrix and at large deflections), may fall as the concrete matures (Bernard, 2020). For example, toughness sustained at 28 days may not necessarily be retained at later ages. It is therefore necessary to consider the degree of deformation likely to be suffered by a FRS lining at later ages when selecting the type and dosage rate of fibre used as reinforcement. The most severe loading placed on a FRS lining will not necessarily be encountered at early ages.

4.3.4 **Other Design Factors**

Fire resistance

Fire resistance is generally not considered in shotcrete specifications for mine applications.

Tunnel – profile and size

Tunnel profile and size can affect application methods and equipment.

Re-entry time

If the re-entry time is critical to the speed of development, then shotcrete may be applied "in cycle". In-cycle shotcrete is defined as the immediate application of shotcrete once a face has been excavated and prior to excavation of the next section, Figure 4.4. Refer to Clause 6.5 and Chapter 7 for details of admixtures and mix design, which influence early age strength and thus re-entry. Higher cement levels and/or lower water cement ratios are typically used together with the higher-grade accelerators for faster set.

Raw material availability

Consideration should be given to use of available waste materials such as sand, tailings and rock for aggregates provided they can achieve the desired design parameters. Availability and choice of cements, supplementary cementitious materials, admixtures, aggregates, and sands can affect the mix design and performance. Refer to Chapter 6 on constituents and Chapter 7 on mix design. Appropriate storage and availability of raw materials must be considered e.g. aggregate storage bins, moisture contents, weather protection etc.

Delivery

The delivery time from the batch plant and delivery method, e.g. concrete agitator trucks or slick line, could affect the quality and ultimate performance of the shotcrete. It is possible to mitigate this with appropriate mix design parameters and admixtures (refer to Chapter 7). Detailed planning of shotcrete deliveries underground is the best control to avoid delays from interaction with other mining activities. Where logistics, weather or geographical factors impact on the regular delivery of high-quality shotcrete, then the use of pre-bagged shotcrete or underground batch plants may provide a suitable alternatives to surface plants.

Testing

In specifying testing of the shotcrete, the user should consider the type and frequency of testing

in relation to the importance of the opening and availability of test facilities due to specific limitations as remoteness. Consideration of systems for ongoing monitoring may be required for long-term openings or excavations predicted to be subjected to large displacements.

Testing is essentially asking a question of a material, the answer of which should be relevant, meaningful, and useful if this is not the case then the proposed test is redundant.

4.4 DESIGN CONSIDERATIONS FOR UNDERGROUND COAL MINES

The underground coal mining industry in Australia has recently seen an increase in the use of shotcrete. There are various reasons for this. Among these is that shotcrete has been recognised as an effective means of controlling gas levels and coal dust within mines. In addition, sealing the surface of coal strata is effective for reducing methane gas emissions, and is highly effective for ground control. Several mines are working toward the acceptance of FRS and bolts is a means of primary ground control in underground coal mines by the Queensland Bureau of Mines which at present continues to demand that mesh and bolting be used as the primary means of ground stabilisation.

The properties of FRS required for ground stabilisation in underground coal mines are very similar to those of FRS required for metalliferous mines. The compressive strength requirement generally lies in the range of 32–40 MPa, energy absorption in the ASTM C1550 round panel tests is generally 360–400 Joules at 40 mm central deflection, and lining thickness is generally 75 mm for normal ground control rising to 150 mm for unstable regions and areas requiring impact resistance. Since mesh and bolts are generally applied before the FRS, there is no minimum early-age strength development requirement and shotcrete is usually applied in a "campaign" style over ~100 m of drive at a time. In underground coal mining, rock-bolts are usually installed prior to the spraying of FRS, and this presents a challenge for shear transfer between bolts and the shotcrete lining. Research is ongoing into the influence of this aspect of shotcrete installation on overall lining capacity. This may be a potential area for "handle bar" type bearing plates, if they can be installed in a mechanised fashion with existing equipment.

Shotcrete linings in underground coal mines are almost all flat and conform to the rectangular profile of drives within these mines. The bond between concrete and coal is usually moderate, but since the coal itself is highly friable and has a close-to-zero tensile strength, the bond between lining and ground can be considered to be non-existent. Since the concrete is substantially stiffer than the ground, vertical deformation of the ground will induce substantial compressive stresses in rib (wall) linings, and some flexural deformation of roof linings. The structural consequences of this pattern of deformation appear to be beneficial to the performance of rib linings, but on-going research is proceeding to confirm this.

The major difference in shotcrete operations between underground coal mines and metalliferous mines concerns the flame risk associated with equipment. All equipment used in underground coal mines must be resistant to hot sparking and flame generation. This entails restrictions on the types of metals that can be incorporated into machinery (such as aluminium and titanium), spark-proof insulation around electrical lines, and controls on emissions from internal combustion engines and compressors. In general, it is preferable that peripheral machinery be driven by air-pressure rather than electrical motors in order to avoid all possible sources of flame ignition, however pneumatic motors are slowly dying out.

The coal mine industry now primarily utilises flame proof electric motors for most equipment, except for diesel engine transport vehicles. In the coming years, like in metaliferous mines, the growth of battery powered vehicles will rapidly grow and reduce the dependency on the diesel-based internal combustion engine.

5

Material Properties

The properties of shotcrete may be specified and measured using the following parameters.

5.1 SLUMP

The slump test is a test method for determining the consistency of concrete. Based on the assumption that the slump of fresh concrete will not vary from batch to batch if the characteristics and proportions of the ingredients do not vary, it is an appropriate quality control test. The test procedure as per AS 1012.3.1 is explained in detail in Clause 14.2. The slump is the vertical subsidence of the concrete that occurs when a slump cone that has been filled with fresh concrete in layers is raised. The slump is by no means an indicator of the pumpability or sprayability of a mix, nor is slump an indication of the suitability or required quality of a mix for spraying.

The magnitude of slump required for a particular shotcreting application will depend on the characteristics of the project. In general, lower slump mixes (60–80 mm) are more suited to applications in which set accelerators are not used, and higher slump mixes (180–220 mm) are more suited to applications in which set accelerators are used. The slump shall be specified as a nominal slump value with the appropriate tolerance from AS 1379. For high workability shotcrete, slump flow/spread (AS 1012.3.5), or a flow table spread (EN 12350-5), may be a more appropriate assessment criterion. If set accelerators are used, then the slump should be optimised for operational requirements. For example, the slump may be selected to minimise pump pressure and pulsations in the line, optimise the dispersion of set accelerator into the concrete stream, or ensure that the shotcrete sticks to the intended surface and does not sag or fall off.

The slump of a mix will be reduced through the addition of fibres. Thus, the fall in slump that will normally occur as a result of the addition of fibres will not necessarily indicate a reduction in the overall performance of the mix in relation to placing characteristics. The slump of a mix will be affected by the ambient and concrete temperature, age of mix after batching, aggregate gradation (especially the percentage of fines and silt present in the materials), aggregate moisture condition, cementitious material type and quantity of admixtures included in the mix. Slump can be adjusted to suit operational requirements by adding water reducers, superplasticiser or slump retention admixtures without reducing the 28-day strength of the shotcrete.

5.2 COMPRESSIVE STRENGTH

The most common of all tests on hardened concrete is the compressive strength test, also known as the unconfined compressive strength (UCS) test. This is because this test method is quite easy to perform and because of the intrinsic importance of the compressive strength of concrete in structural design. Compressive strength test results may be affected by variation in the type of test specimen, specimen size, type of mould, curing, preparation of the end surface, rigidity of the testing machine and the rate of application of the stress, so for this reason testing should follow a single standard with no departure from prescribed procedures (Neville, 2006).

Unless otherwise specified, compressive testing is undertaken at 28 days, and if the standards are followed correctly and the specimens are properly sampled, cast, compacted, cured and tested, they should be representative of the potential strength a mix may reach at the specified age.

It is important to distinguish between the compressive strength of the shotcrete as sampled pre- and post-spraying. Pre-spraying, the concrete can be sampled as delivered in its fresh state where standard procedures can be followed, and specimens are cast in a standard sized cylinder. Post-spraying is where the concrete has undergone pumping and spraying, often with an accelerator added, compaction is dependent on air pressure and nozzle technique, curing could be inadequate and the effects of ambient temperature on site all contribute to changing the concrete matrix substantially. Furthermore, it is not possible to successfully spray cylinders due to the excessive collection of rebound within the moulds. Specimens therefore need to be cored either directly from the structure, a sprayed test panel, or a specially manufactured box. Cored samples often are a different size to standard cylinders.

An allowance of 20% is usually made for the difference between a standard test cylinder cast from the shotcrete mix and a core taken from a test panel sprayed using the same mix. This takes into account the effect of set accelerators on compressive strength development of sprayed shotcrete compared to cast samples. For instance, if a specification of 32 MPa is required for the structure in-situ, then it is usual to specify a cylinder strength of 40 MPa for the concrete as delivered. Similarly, a specified in-situ strength of 40 MPa would require a cylinder strength of 48 MPa for the concrete as delivered. In non-accelerated shotcrete the difference in compressive strength between the concrete as delivered and as sprayed will be less than for accelerated shotcrete.

Correction factors for cores are listed in AS 1012.14 and should not be confused with the AS 3600 correction factor of 1.15. Refer Clause 14.5 for test methods. No assumptions should be made about the relationship between the strength of cast cylinders representing shotcrete as supplied and cores representing shotcrete as sprayed. If such a relationship is required, then it should be developed by conducting tests on cast cylinders using shotcrete as supplied and cores representing shotcrete as sprayed.

The compressive strength of in place shotcrete should be determined from cores of the sprayed material taking into consideration the aspect ratio and not from cylinders which present the delivered strength pre-spraying.

The compressive strength of hardened shotcrete is highly dependent on the water/binder ratio. The water/binder ratio for wet-mix shotcrete normally ranges from 0.4 for civil and underground application to as much as 0.65 for swimming pools. Ratios in the order of 0.35 can be readily achieved using High-Range Water Reducers. The water/ binder ratio is within the range 0.3 to 0.5 for dry-mix shotcrete but can vary widely due to uncertain control by the sprayer. For wet-mix shotcrete, compressive strengths (without accelerator) can range between 20 and 70 MPa at 28 days. For compressive strengths more than 40 MPa at 28 days, embrittlement should be considered. Infrastructure projects normally specify a minimum strength of 40 MPa at 28 days to be included in the works. Refer to Table 5.1 for typical strengths encountered in various applications.

Table 5.1: *Typical target UCS ranges for recent Australian projects*

Application	Typical target strength range
Swimming Pools	25–32 MPa
Basements/Cellars	32–40 MPa
Tunnel linings	40–50 MPa

5.3 EARLY-AGE STRENGTH

Shotcrete for ground support is often required to reach a minimum strength at an early age – often within the first few hours after spraying. Early-age strength is the strength of the shotcrete required at a time earlier than the conventional 28 days specified for normal concrete supply. Cores and cylinders are often inadequate for the task of determining early-age strength. For this reason, various indirect methods have been devised for the purpose of testing the early-age strength. An example is a penetrometer which is operated by pushing a probe or needle into a freshly sprayed test surface that is located nearby but away from unsupported ground. Care should be taken to calibrate the penetrometer readings with actual compressive strength values. Four of the available indirect test methods for estimation of early-age compressive strength are described in Clause 14.6.

5.4 FLEXURAL STRENGTH

Shotcrete is loaded in flexure in the majority of applications in Australia, for example, in swimming pools, slope stabilisation linings, and tunnel linings. Flexural strength is the strength of a member in bending. If flexural performance is important, it is more appropriate to directly measure the flexural strength of shotcrete and use this for design purposes rather than estimate the flexural performance of the material based on assumed relationships between flexural strength and compressive strength.

The flexural strength of the concrete matrix is also known as the Modulus of Rupture (MOR) and is the theoretical maximum stress reached in the extreme tensile fibre of a test beam at the point of cracking under point loading conditions. This stress is usually determined on the basis of an elastic distribution of stress through the cross section of the beam.

The magnitude of the flexural strength of shotcrete can be up to 15% (generally 10% for non-fibre

reinforced shotcrete) of the compressive strength for both wet and dry mix and can increase with age. The flexural strength is typically measured using a third-point loaded or centrally-loaded beam and is based on the load at first crack. Notched or un-notched beams may be tested, depending on the specified test method. The preferred test methods for residual strength (EN 14651) and energy absorption (ASTM C1550) are covered further in Clause 14.8. Load capacity beyond first crack is associated with reinforcement and can be measured using toughness tests. If toughness is required because of post-crack load-carrying requirements then a specification for flexural strength may not be necessary.

5.5 TOUGHNESS

Toughness is a measure of the post-crack load carrying capacity of fibre reinforced shotcrete. It is an important property where post-crack displacement and deformation are expected. Toughness can be assessed in terms of either the residual strength or energy-absorption capacity, typically between the onset of loading and a specified deflection in a beam or panel test, and is sometimes determined as the area under the load-deflection plot for the test specimen. It is a property that is primarily affected by fibre design and content but can also be strongly influenced by the strength and quality of the shotcrete matrix. The units of measure are Joules (Nm or kNmm) or MegaPascals (MPa).

In Australia and North America, the round panel test, as described in ASTM C-1550, has become the more common test method for measuring the toughness of fibre-reinforced shotcrete. In other parts of the world, particularly Western Europe, the Euronorm EN 14651 beam is the most common. There is evidence that useful correlations exist between toughness values developed using the various test methods within the range of toughness values normally specified (Bernard, 2002, 2004b) provided the thickness of the specimens is the same.

The “Q” Rock Quality system commonly used for empirical determination of ground support was updated in 2002 to include EN 14488-5 panel toughness values for fibre-reinforced shotcrete used in ground support linings (Grimstad et al., 2002).

Toughness values required for a project depend on the requirements of the application; the values and appropriate test method should be specified by the engineer or geotechnical expert.

In mining applications where significant deflections and crack widths are not only permitted but sometimes seen as a reasonable indication of the economic suitability of the support system, it is common practice to specify performance in terms of toughness determined from panel tests. Conversely, in civil engineering applications, given the need to keep crack widths to a minimum for long-term durability, the design stress values need to be determined at the relatively low crack widths used in standard beam tests. Typically specified minimum values for toughness in mining applications are listed in Table 5.2 and civil applications in Table 5.3.

Table 5.2: *Typical toughness values specified in recent Australian mining projects*

Type of support	Specified toughness[1]
Non-structural or low deformation	280 Joules
Moderate ground support	360 Joules
High-level ground support	450 Joules

NOTES: [1] 40 mm deflection in ASTM C-1550

Table 5.3: *Typical toughness values specified in recent Australian civil projects*

Deformation	Specified toughness
Small	3 MPa residual flexural strength[1]
Large	(60–100 Joules@5 mm deflection)
	400–500 Joules@40 mm deflection[2]

NOTES: [1] 3 mm deflection in EN 14651 beam, but actual values must depend on engineering analysis.
[2] 40 mm deflection in ASTM C-1550 to support localised ground instability.

5.6 DENSITY

5.6.1 General

The density (Mass / Unit Volume) of good-quality normal-weight shotcrete is typically between 2200 and 2500 kg/m^3 density is divided into two parts:

- Density of fresh shotcrete
- Density of hardened shotcrete.

5.6.2 Density of Fresh Shotcrete

Knowing the density of the shotcrete in its fresh state is important for determination of the yield as well as ensuring that the total weight of the shotcrete

batched does not exceed the axle loads of the concrete truck or any weight limits imposed on any public roads that might be used to reach the workplace from the batch plant.

Determination of the yield of the mix ensures that the end user is receiving the correct amount of shotcrete that they have purchased or ordered. Density testing of fresh concrete is described in AS 1012.5 is an exceptionally good quality control of the overall mix as the density calculated should match the design density of the mix design. This is since the mix design of shotcrete is site specific with the mix proportioning being based on the materials used in that specific mix and their respective specific gravities. If there is a change of materials, then the mix design needs to be changed accordingly. When the density differs from the mix design density it could be indicative of a number of potential issues such as incorrect proportioning where the most common problem being failure to correct the proportions properly for either overly dry or overly saturated aggregates, other issues it could highlight is use of wrong materials, wrong proportions or even metering devises that are out of calibration.

5.6.3 Density of Hardened Shotcrete

The density of fresh shotcrete and hardened shotcrete will be related but are not expected to be identical. The relationship between the fresh and hardened samples of a particular shotcrete mixture will depend on the mixture proportions and characteristics of the aggregate, the degree of consolidation, sampling, volume changes, age and curing. The relative density of in-place shotcrete compared to the cast shotcrete as supplied provides an indication of application quality and should be greater than 98%. The effect of inadequate compaction of shotcrete can be a significant reduction in compressive and flexural strength (approximately 4% for each 1% void content). Inadequate compaction can be measured as a reduction in in-place density compared to density as supplied when measured in accordance with AS 1012.5 However, the density of shotcrete sometimes increases after spraying due to the expulsion of entrained air during the spraying process. For this reason, it may be necessary to measure the entrained air content of the fresh shotcrete at the same time as the density testing.

5.7 MODULUS OF ELASTICITY

The Modulus of Elasticity (E_c), often referred to as Young's Modulus, is a measure of the mechanical rigidity of shotcrete. The Modulus of Elasticity generally falls between 25–30 GPa at an age of 1 year.

Accelerated shotcrete is generally less stiff than non-accelerated shotcrete. The Modulus of Elasticity is affected by the type, quantity and quality of coarse aggregate used in a mix, but is difficult to control and therefore is rarely specified in shotcrete applications.

5.8 DRYING SHRINKAGE

The unrestrained drying shrinkage of a material is the extent to which the material decreases in length over a linear dimension when the moisture content of the material is reduced. The restrained drying shrinkage of a material will be less than the unrestrained drying shrinkage but the relation between the two parameters is complex. The drying shrinkage of shotcrete varies with water content, aggregate type and size, and mix proportions, but generally falls within the range 800–1200 microstrains at 56 days when tested in accordance with AS 1012.13. This is higher than most low-slump conventional-cast concrete because of the higher cement content and comparatively low coarse aggregate fractions required for pumpability and sprayability. The AS 1012.13 drying shrinkage test is applicable to cast concrete, and is therefore valid for the shotcrete base mix which does not contain set accelerators. Assessing the actual drying shrinkage of sprayed concrete containing a set accelerator is more difficult, see Clause 14.10. It can be expected that the in place unrestrained shrinkage will be higher than the base mix. The relatively high drying shrinkage experienced by shotcrete may require a closer control-joint spacing, or consideration of the use of shrinkage reducing admixtures (SRA).

5.9 CREEP

Creep is the time-dependent deformation of a material under load. The creep strain suffered by a material is commonly expressed as a multiple of the short-term strain suffered as a result of elastic deformation. This multiplier is termed the "creep coefficient". For concrete, creep in compression can be measured using AS 1012.16. The creep of shotcrete in flexure is not necessarily related to the creep of

the same material in compression, especially after cracking has occurred. A limited amount of information is available on the rate of creep of fibre-reinforced shotcrete in flexure after cracking (Bernard, 2004a; McKay & Trottier, 2004)

For a well-designed shotcrete mix with a low water-cementitious ratio, a magnitude of creep strain similar to those exhibited by high-quality cast concrete can be expected. When the water content is high the creep strain suffered under a given level of stress will be higher. The creep coefficient of shotcrete will also be higher than that of cast concrete due to the higher paste content.

5.10 COEFFICIENT OF THERMAL EXPANSION

The coefficient of thermal expansion is the rate at which shotcrete expands or contracts as temperature increases or decreases. A value of the coefficient of thermal expansion is generally required for crack control calculations, in particular for high-temperature applications (i.e. refractory linings).

An estimate of 11×10^{-6}/°C is usually adopted, although for both shotcrete and conventional concrete the coefficient of thermal expansion appears to vary directly with the coefficient of thermal expansion of the coarse aggregate which depends on the silica content (the greater the silica content the greater the coefficient of thermal expansion of the aggregate (Neville, 2002)).

5.11 DURABILITY

5.11.1 General

The term durability describes the ability of shotcrete to resist aggressive agents within the service environment that it is exposed to. The aggressive influences may include climate, extremes of temperature, seawater, chemical contact, or impact and abrasion. Shotcrete can exhibit durability comparable to conventional cast concrete, thus most durability considerations and tests that apply to conventional concrete also apply to shotcrete.

The use of high doses of set accelerator in shotcrete can be detrimental to durability if not accounted for in mix design, but may reduce the effects of freeze thaw. The resistance of dry-process shotcrete to freeze/thaw can be greater than that of wet-process shotcrete provided water/cementitious content levels are maintained at low levels. Incorporating an air-entraining agent into wet-process shotcrete can reduce this performance difference, but a significant amount of entrained air present during mixing can be lost in the process of spraying (e.g. 18% initial air content reduced to 6% in-place air content following spraying, Beaupre et al. (2001).

5.11.2 Chloride and Sulphate Content

Chlorides may be present in the shotcrete as supplied if they have been incorporated into the mix through the use of contaminated aggregate, seawater, brackish water, or by admixtures containing chlorides. The main concerns due to the presence of chloride ions in shotcrete are the adverse effects on corrosion of steel reinforcement and increased drying shrinkage.

An excessive level of sulphates may be present in shotcrete as supplied due to the composition of the ingredients (i.e. the cement, aggregate, admixtures and water). The most frequent adverse effects on shotcrete due to the presence of excessive sulphates are on its soundness, setting times, and later-age strengths. Refer to section 14.12 for test methods AS 1012.20 (AS 1012.20.1 for acid soluble chloride and sulphates and AS 1012.20.2 for water soluble chlorides and sulphates).

5.11.3 Water Penetration through Bulk Shotcrete

The permeability of concrete is a measure of its resistance to the passage of gases or liquids. Unfortunately, permeability is difficult to measure directly, hence parameters like the depth of penetration of water through a sample of concrete after a given period of exposure are used to indicate relative permeability. The penetration depth of water through shotcrete included in the works can be determined in accordance with EN 12390 Part 8. The maximum allowable penetration depth for various exposure conditions can vary between 25 and 30 mm, but it must be considered that the normal variability in this parameter for well-prepared samples is about 15–20 mm depth of penetration. Cracks in shotcrete that permit water ingress are another source of water penetration, and an allowable crack width and Lugeon rating (drips per lane kilometre) should be assessed as per the relevant durability plan.

Lugeon developed a method, named as the lugeon test (Lancaster-Jones, 1975) and which

determines the transmissivity of rock. The test is based on pressurising water in a borehole opened in a rock mass and recording water loss over a time interval. One lugeon (L) is equal to one litre of water per minute injected into 1 metre of borehole under 10 atmosphere pressures. If the test results in less than 1 lugeon, the rock mass is considered impermeable; 1–5 lugeon means the rock mass is slightly permeable, 5–25 lugeon means it is permeable and >25 lugeon means highly permeable. A lugeon is accepted as 10^{-7} m/s. The Lugeon test is a widespread testing method for determination of rock mass permeability especially in dam investigations and grouting projects.

5.11.4 **Water Absorptivity and Compaction Testing**

Absorptivity of concrete is the measure of the amount of water (or other liquid) which the concrete will "soak up" when immersed in the liquid through voids and pores present in the concrete (CCAA). The absorptivity of shotcrete is therefore an indirect measure of the volume of voids in the material. Various tests can be carried out in relation to voids content in shotcrete, and maximum values can be specified (e.g. maximum volume of apparent permeable voids of 17%, or maximum boiled absorption ratio of 8%, according to AS 1012.21 or ASTM C642. These tests are often specified for shotcrete to check the degree of in-situ compaction. They are usually performed on cores taken from sprayed test panels.

The level of compaction achieved can also be measured as the relative density of in-place shotcrete compared to the density of cast shotcrete (see Clause 14.6).

5.11.5 **Alkali-Silica Reactivity (ASR)**

This reaction normally occurs between reactive silica constituents within aggregate and the alkalis in cement and is also known as Alkali Aggregate Reactivity (AAR). The reaction starts with an attack on the siliceous minerals in the aggregate by alkaline hydroxides in pore water derived from alkalis which may have originated from within the concrete, via Na_2O and K_2O in the cement etc, or externally by some other source. This results in an alkali-silica gel being formed, either in planes of weakness or pores in the aggregate (where reactive silica is present), or on the surface of the aggregate particles. This can affect bond between the aggregate and the surrounding hydrated cement paste. The "gel" imbibes water and may swell causing expansion of the aggregate and possible cracking of the concrete. This reaction only takes place in the presence of moisture. Suitable blended cement can be an effective means of reducing the expansion due to ASR. Aggregates should be tested for potential reactivity and a scheme for management of potential ASR be established. Management of ASR should be considered as per SAA HB79. Aggregates should comply with the requirements of Australian Standard AS 2758.1.

5.12 **BOND TO SUBSTRATE**

Bond strength between a layer of shotcrete and an underlying substrate is dependent on many variables including the type and condition of the substrate. The tensile strength of the ground itself may be negligible, particularly in coal-bearing ground, shale, schist, and soil. Different materials exhibit widely varying bonding capability. To maximise the development of bond the surface to be sprayed should be clean and sound. It has been noted that hydro-scaling preparation promotes higher bonding capacity (Clements et al., 2004), and in some applications a bonding agent may also promote improved capacity. Bond strength development at early ages is poorly understood but some information on this topic is provided by Bernard (2008).

Due to the unknown character of most substrates, specifying minimum bond strength development between shotcrete and an underlying substrate should be avoided. It is more rational to specify a surface preparation method that will maximise opportunities for bond development to the substrate. There is no available Australia Standard for testing bond strength between shotcrete and substrate but several methods are currently employed internationally, including the EFNARC bond test and Swedish Standard 137243 test. A simple test to examine the existence of any bond is hammer sounding. Refer to Clause 14.14 for test procedures.

Specifiers should be aware that bond between a shotcrete lining and deforming ground will most likely reduce to zero over time. Bolted connections between a lining and ground are normally used in these situations. Because of the above reasons, long-term bond should not be specified or relied upon.

6

Constituent Materials

Shotcrete consists of cementitious materials, fine and coarse aggregates, water, additives such as (pigments), admixtures and often fibres. The water/binder (w/b) ratio is the mass of water divided by the total mass of binder comprising all cementitious materials in the shotcrete mix. The water/binder ratio is important as it has a major effect on the strength, shrinkage, and durability of shotcrete.

6.1 CEMENT

In Australia hydraulic cements are classified as:

- General purpose cement (type GP)
- General purpose limestone cement (Type GL)
- Blended Cement (Type GB)
- Special purpose cements
  - Type HE – high early cement
  - Type LH – low heat cement
  - Type SR – sulphate resisting cement
  - Type SL – shrinkage limited cement.

For wet mix robotically applied shotcrete where use is made of an alkali free accelerator only general purpose cement (Type GP) should be used however if a shrinkage limiting cement (Type SL) is specified then it can be used if it meets AS 3972 and contains at least 92.5% Portland cement. This is because the reaction of the accelerator is reliant on the tricalcium aluminate (C_3A) present in Portland cement.

A combination of one or more supplementary cementitious materials (SCMs) can also be added to the mix. These SCMs must comply with Australian standard AS/NZ 3582

Some rare applications might require High Alumina Cement (HAC). HAC is imported into Australia and does not comply with AS 3972. It differs markedly from Portland cement in its chemical composition and in its hydration characteristics. HAC is characterised by a very rapid rate of early strength gain accompanied by high heat evolution. Refer Clause *7.5 Special Mixes*. Also refer to *CCAA T41* for further information on "Hydraulic Cements".

6.2 SUPPLEMENTARY CEMENTITIOUS MATERIALS

6.2.1 Grade 1 Fly Ash

Fly ash is a finely-divided inorganic pozzolanic material which can be added to concrete and mortar to improve or achieve certain properties in the fresh and/or hardened states. Fly ash in shotcrete can also provide lubrication between larger particles within the mix due to its spherical shape and thereby reduce water demand, increase workability, and can help reduce alkali-aggregate reactivity at particular content levels. Addition of fly ash reduces the overall reactivity of the mix and this should be considered when using shotcrete accelerators.

A typical fly ash content in shotcrete generally ranges between 10% to 25% by weight of total cementitious materials depending on cement type and application. When using fly ash as a substitute for part of the cement content, consideration must be given to the effect on early strength development and fly ash quality. Grade 1 fly ash for use in shotcrete should comply with the requirements of AS 3582.1.

6.2.2 Special Grade Fly Ash

Special grade flyash is a more reactive flyash with average particle size that is finer than that of normal grade fly ash and around one quarter that of Portland cement. This inorganic pozzolanic material can be added to concrete and mortar to improve or achieve certain properties in the fresh and/or hardened states. It can perform similarly to silica fume at particular dose rates. If used in shotcrete it should comply with the requirements of AS 3582.1.

6.2.3 Silica Fume

Silica fume is a form of amorphous silica (AS 3582.3) and is a finely-divided, highly-reactive inorganic pozzolanic material which can be added to shotcrete to improve or achieve certain properties in the fresh and/or hardened states. The benefits of silica fume use in shotcrete include: higher strengths (28 days and beyond) including compressive and flexural performance; improved durability including reduced permeability due to pore blocking as its average particle size is significantly smaller than a General-Purpose cement particle; reduced rebound;

improved bond to substrates; improved pumpability; reduced wear in the pump and nozzle; improved mix cohesiveness; and thicker single-pass applications. It should be noted that silica fume does not improve strength development prior to 7 days age, and can increase drying shrinkage.

A typical dosage rate of silica fume in shotcrete generally ranges between 5% to 10% by weight of cementitious materials. The undensified form of silica fume is generally preferred for shotcrete. It is recommended that expert opinion be consulted to determine appropriate silica fume levels.

6.2.4 Amorphous Silica other than Silica Fume

AS 3582.3 was revised in 2002 to include sources of silica in addition to silica fume. The standard was re-titled "Amorphous silica" which was defined as "a very-fine pozzolanic material composed of mostly non-crystalline silica". Typical sources of such amorphous silica include volcanic vents and precipitated silica from industrial processes.

6.2.5 Slag – Ground Granulated Blast Furnace Slag (GGBFS)

Ground granulated iron blast-furnace slag (AS 3582.2) is a fine granular latent hydraulic binding material which can be added to concrete and mortar to improve or achieve certain properties in the fresh and/or hardened states. These properties include; lower heat of hydration, slower set times, increased sulphate resistance, and higher chloride-ion resistance. GGBS can exhibit interaction problems with some types of shotcrete set accelerators.

In a shotcrete binder mix containing slag, there are unlikely to be any adverse reactions between alkali-free accelerators and GGBS in either the plastic or hardened phases. The free lime in OPC will quickly neutralise the acidity of the alkali-free accelerator, and gypsum forms very quickly. Thereafter, the neutralised alkali free accelerator in the plastic shotcrete participates chemically to form aluminate hydrates which stiffen the mix. As the normal calcium silicate hydration reactions progress there is a sustained release of calcium hydroxide (portlandite) keeping the pH very high for the paste and hardened concrete. In this way, the sulphide residues in the GGBS remain unreacted to the extent that there is protection from the high pH in the concrete. There is unlikely to be a reaction between hydrogen sulphide and alkali-free accelerators if the accelerator is exposed to hydrogen sulphide gas. Both are acidic so no acid/base neutralisation reaction is likely to occur.

6.3 AGGREGATES

All aggregates should comply with Australian Standard AS 2758.1. Specified aggregate gradings in previous editions of the standard have been removed in recognition of the wide variety of gradings in use in Australia. Aggregate makes up the bulk of the mix in shotcrete. With the onerous demands made on the mix for pumping and spraying, as well as the structural outcomes usually expected of shotcrete, care should be taken in selection of quality aggregates that have an ideal shape and a smooth grading curve. The use of finer sands generally results in higher drying shrinkage while the use of coarser sands generally results in more rebound. For acceptable combined aggregate gradings of the shotcrete mix refer to Chapter 7. Natural fine and coarse sands are less abundant with manufactured sands becoming more prominent. The chloride-ion and the sulphate-ion content of each aggregate should be determined in accordance with the relevant Australian standards prior to proposal for use in the shotcrete.

6.4 MIXING WATER

Water quality can have a significant effect on shotcrete performance. Mixing water should be drawn from a source of acceptable quality complying with Australian Standard AS 1379 and comprise potable water if possible. If potable water is not available then further testing is required to determine suitability. Dissolved solids greater than 3000 ppm may affect shotcrete performance and durability. When required, use chilled or heated water (if available) to adjust or control the mix temperature during batching.

6.5 CHEMICAL ADMIXTURES

6.5.1 General

Chemical admixtures and their use should comply with Australian Standard AS 1478.1 where applicable. Where two or more admixtures are proposed for incorporation into a shotcrete mix, their compatibility should be tested prior to use to ensure no

adverse effects or the manufacturers of the admixtures should certify the suitability of the proposed sequence of addition and their compatibility.

Shotcrete set accelerators and other admixtures, which are added to the shotcrete at the nozzle or at the delivery hose, should be dispensed by calibrated mechanical means at dose rates not exceeding the maximum recommended by the manufacturer. Re-addition of most admixtures becomes increasingly less effective as the age of a mix increases. The main categories of chemical admixture are listed below. They are used to improve certain aspects of shotcrete performance such as pumpability, hydration control, slump retention, shrinkage, strength, permeability and waterproofing.

According to AS 1478, water reducing admixtures can be classified into three major groups:

- Water Reducers (WR) with 0 to 5% water reduction
- Mid-Range Water Reducers (MWR) with 5 to 10% water reduction
- High-Range Water Reducers (HRWR) with 10 to 15% water reduction.

6.5.2 Water Reducers

Water reducers are used to improve workability and/or reduce the water/binder ratio. Other effects such as retardation may occur and expert opinion may need to be sought where such slow setting is experienced as this may affect the performance of the shotcrete accelerator. Refer to manufacturer's recommendations and AS 1478.1 for specific details. Water reducers may be formulated to have neutral setting, set retarding or set accelerating characteristics. The performance of each type is to comply with the requirements of AS 1478.1 for that particular type.

6.5.3 Mid-Range Water Reducers (with or without set control properties)

As the name implies, this is a class of medium range water reducers intermediate between low and high range water reducers. According to AS 1478.1 – B2.10: Medium-range, water reducing admixture (Type MWR), is a class of admixture that has a significant water-reducing function, sufficient to raise the slump of concrete to produce a highly plastic consistency, without changing the water/binder ratio.

6.5.4 High-Range Water Reducers (Superplasticisers)

High-range water reducers and their use should comply with Australian Standard AS 1478.1. High-range water reducers are used to either increase the strength or increase the workability of a mix, considerably, without loss of strength. The development of superplasticiser technology has allowed lower water/binder ratios to be used, with higher strengths, greater workability, and improved pumpability. Superplasticisers are normally only added to wet-mix shotcrete. Dose rates (depending on type of superplasticiser) generally range from 0.5% to 2% by weight of cementitious materials.

6.5.5 Viscosity Modifying Admixtures (VMA)

The key function of a VMA is to modify the rheological properties of the cement paste. Viscosity Modifying Admixtures can be used to produce concrete with better robustness against the impact of variations in the concrete constituents and in site conditions, making it easier to control and friendlier for the producer and the user.

VMAs are a family of admixtures designed for specific applications. They are used to:

- reduce segregation in highly flowable concrete.
- reduce friction, pressure and wear in pumped concrete.
- compensate for poor aggregate grading, especially a lack of fines in the sand.
- reduce bleeding in concrete.

6.5.6 Shrinkage Reducing Admixtures

Shrinkage is a critical parameter related to potential cracking and bond durability, particularly if shotcrete is used for permanent tunnel linings. Where shotcrete is used only for temporary ground support, shrinkage is less important because the shotcrete lining is mostly under compression and it does not have to be considered in the lining design.

The potential of shrinkage cracking may be increased by different parameters, including the substrate moisture prior to shotcrete application (the substrate may absorb water from the concrete), ventilation, or air flow in the tunnel, high cement content and the "uncontrolled" addition of accelerators. A higher dosage of accelerator generally results in higher shrinkage strain.

The drying shrinkage of shotcrete is an ongoing process when concrete is subjected to drying conditions. The loss of water in gel pores causes volume changes. It depends on the mixture proportion and generally ranges between 0.06 and 0.10% at 3 months. Shotcrete mixes usually consist of a low content of coarse aggregates, a high content of fine aggregates and cementitious materials which increase the risk of shrinkage. Therefore, to avoid or limit shrinkage, strict control of the water/binder ratio is mandatory.

Numerous shrinkage-reducing admixtures (SRAs) have been developed with the goal of reducing drying shrinkage and delaying or preventing cracking. Most SRAs function by reducing the surface tension of the pore solution in the concrete. Potential interaction with other admixtures and fast set accelerators needs to be assessed prior to use.

6.5.7 **Waterproof Admixtures**

Crystalline waterproofing is a technology that involves the development of crystals within pores and cracks to help achieve watertight concrete structures. Crystalline waterproofing prevents the movement of water through the concrete by plugging or blocking the natural pores, capillaries and micro cracks, thereby making concrete its own waterproofing barrier.

When crystalline products are added to concrete, crystalline chemicals facilitate a reaction that causes long, narrow crystals to form, filling the pores, capillaries and hairline cracks of the concrete mass. If moisture remains present, crystals continue to grow throughout the concrete. Once the concrete has dried, the crystalline chemicals sit dormant until new water is added which causes the chemical reaction known as crystallisation to begin again. Any moisture introduced over the lifespan of the concrete will initiate crystallisation, ensuring permanent waterproofing protection. This occurs because crystalline waterproofing is self-sealing and reacts throughout the life of the concrete structure to seal cracks up to a half millimetre wide further ensuring that the structure is permanently waterproofed. Potential interaction with other admixtures and fast set accelerators needs to be assessed prior to use.

6.5.8 **Internal Curing**

Self-curing is an “internal curing system” where a water-soluble polymer is added to the concrete mix. This method overcomes the difficulty in ensuring that effective curing procedures are employed by construction personnel as the internal curing admixture is a component of the mix.

6.5.9 **Hydration Control Admixtures**

Concrete that is required to be transported for considerable distances from the batching plant to the site, delays in construction schedules, as well as plant and equipment breakdowns, ensure that much of the concrete actually sprayed is beyond its workable life. In addition to this, environmental regulations may impose restrictions upon the working hours of batching plants in urban areas, meaning that a contractor who requires sprayed concrete mixes to be supplied 24 hours a day may only be able to obtain material for 12 hours each day. Problems such as these create unnecessary additional construction costs for both the contractor and the client. In these circumstances the working life of concrete mixes may need to be increased to a number of hours or days.

The process of cement hydration leading to setting causes a rapid reduction in workability through the interlocking of Calcium Silicate Hydrate (CSH) crystals. To overcome this process, a hydration control admixture (commonly known as a “stabiliser”) may be added that effectively coats the cement grains and temporarily stops the normal hydration process. The extension of time before the onset of setting that is achieved through this process is determined by the dose level of the admixture.

Where the hydration of the shotcrete has been temporarily halted it can be re-activated by the addition of a set accelerator or left to set slowly by waiting for the CSH crystal structure to penetrate the coating and interlock with the surrounding cement grains (AS 1478.1, B11.2.5). Slump loss may still occur with hydration control admixtures in place, whereas a slump retention admixture can be used in conjunction with a stabilizer to maximise slump life. The concrete should be re-mixed at high speed for a sufficient period prior to use to overcome possible segregation that can occur while waiting.

6.5.10 **Set Accelerators**

Set accelerators are primarily used to aid the placement of shotcrete by promoting the rapid setting of the mix which may allow subsequent layers of shotcrete to be applied sooner and at greater

thickness. They may also accelerate early strength development. Overdosing of a set accelerator can delay the rate of strength development and compromise durability therefore manufacturer's recommendations on maximum dosage rates should be followed. Set accelerators are added to the concrete at the nozzle or at the delivery hose in wet shotcrete and added at the bowl or nozzle for dry shotcrete (refer Figure 9.13). Advantages of the use of shotcrete accelerators include large reductions in fall-out, increased layer thicknesses, particularly in overhead applications, and increased speed of construction. Shotcrete accelerators should be alkali-free and non-caustic. This type of accelerator has a pH of approximately 3 which provides a safer working environment for shotcreting operators compared to the older type of caustic accelerators (pH >12).

Shotcrete accelerators may reduce concrete strength in the long term compared to concrete without accelerator. Further strength reduction occurs as the dosage increases, and it is therefore important that accelerator test data is available and maximum dose rates are controlled. Dose rates generally range from 3% to 8% by weight of cementitious materials. Accelerators are normally supplied in a liquid form but are also available as a powder.

Set accelerators for shotcrete should not be confused with hydration accelerators commonly used for cast concrete. The two classes of accelerator comprise distinctly different groups of chemicals with different reaction pathways and different effects on rate of setting, rate of hydration, durability of the concrete matrix, and (sometimes) corrosion of steel reinforcement.

Accelerators for cast concrete promote an increase in the rate of hydration of normal calcium-silicate-hydrates. Accelerators for shotcrete promote rapid setting by generating ettringite crystals or promote stiffening through generation of gel products between the cement particles in suspension in the paste. The formation of ettringite crystals or gels can be very fast making the shotcrete stiffen rapidly. Table 6.1 includes a list of chemicals available for promotion of accelerated hardening in cast concrete and for accelerated setting for shotcrete.

Modern alkali-free set accelerators for shotcrete are drawn exclusively from the last two categories in Table 6.1. They are termed "alkali-free" because they lack the alkali ions (either sodium Na^+ or potassium K^+), associated with the earlier classes of shotcrete accelerator. All of the earlier alkali-rich shotcrete accelerators were dangerous because of the caustic burns they could inflict on skin, lungs, and especially eyes. All the highly caustic alkali-rich set accelerators are effectively banned from use in Australia.

All of the accelerators commonly used in cast concrete are insufficiently fast to promote useful stiffening of shotcrete for overhead applications. They are typically added into the agitator bowl and mixed

Table 6.1: *Accelerators for cast concrete and shotcrete*

Class/Category	Active component	Characteristics
Chemicals for accelerated hardening (for cast concrete)		
Calcium Chloride	$CaCl_2$	Relatively fast, increases bleed and shrinkage, promotes steel corrosion
Calcium Nitrate	$CaNO_3$	Safe but relatively slow, increases shrinkage
Triethanolamine	$C_6H_{15}NO_3$	Safe but relatively slow, increases shrinkage
Chemicals for accelerated setting (for shotcrete)		
Hydroxides	NaOH, KOH	Highly caustic, harmful to eyes
Carbonates	Na_2CO_3, K_2CO_3	Highly caustic, harmful to eyes
Sodium Aluminates	$NaAlO_2$	Caustic, promotes stiffening through gel formation
Sodium Silicate (Waterglass)	$NaO{\cdot}nSiO_2$	Highly caustic, harmful, promotes stiffening through gel formation
Calcium Aluminate	$CaO\text{-}Al_2O_3$	Non-caustic, mildly alkaline, safe alkali-free powder-based accelerator
Aluminium Sulphate	$Al_2(SO_4)_3$	Non-caustic, mildly acidic, safe alkali-free powder or liquid accelerator

into the concrete, and take approximately 1 hour before enhancing the rate of hydration. However, their effect on hydration appears to be supplemental to that of normal alkali-free set accelerators and thus may be used in addition to normal set accelerators for shotcrete, but not as a replacement.

Note that both calcium aluminate-based and aluminium sulfate-based set accelerators promote the rapid formation of ettringite crystals as the stiffening mechanism in young shotcrete. This hydration product compromises the durability of the concrete matrix against sulphate attack and thus the minimum amount of shotcrete set accelerator necessary to satisfy operational requirements should be used. Once the rapid set is completed, no more ettringite forms.

6.5.11 **Admixture for Clay Mitigation**

A chemical admixture specifically designed and formulated to selectively react with clay contaminants in both coarse and fine aggregates, being a highly engineered product that complies with AS 1478 as a Type SN, it can eliminate the negative effect of clays in concrete through irreversible chemical reaction. The technology is based on chemically distinguishing between beneficial fines and clay contamination mitigating the negative impact of the latter. This allows concrete producers to:

- Use clay bearing aggregates (natural and crushed) without compromising on concrete performance.
- Significantly increase manufactured sand amount in mix design.
- Increase utilisation of lower quality/clay contaminated aggregates.
- Significantly improve concrete performance through lowering water demand and concrete admixtures demand by blocking clay particles.

6.6 **FIBRE REINFORCEMENT**

Fibres are short (up to 65 mm long for macro synthetics) slender elements typically of high tensile capacity. They may be added for the purpose of improving impact resistance, or shrinkage control, but their main role is to provide post crack load capacity (toughness/residual strength) to the shotcrete. Fibres generally do not increase the tensile or flexural strength of the concrete matrix when used at normal dosage rates.

The benefits of fibres compared to the use of steel mesh reinforcement include a more even distribution of reinforcement throughout the shotcrete, improved overall economy, reduction in rebound, and improved compaction. Fibre reinforced shotcrete can also follow an uneven profile more efficiently than mesh reinforcement. Vibration of mesh leading to de-bonding from the substrate is also avoided. Logistics can also be simplified compared to mesh reinforcement, with improvements in application, safety, and productivity.

Characteristics of the fibres affecting shotcrete performance include: aspect ratio (overall length to diameter), tensile strength, shape, and the dose rate (kg/m^3 of shotcrete). However, in the majority of applications the type of fibre should not be prescribed according to length, shape, material, or any similar characteristic. Instead, if post-crack performance of the shotcrete is important then the principal criterion that needs to be specified is residual strength or energy absorption.

Typical fibre reinforcement materials include: drawn steel wire, slit steel sheet, polypropylene (monofilament or fibrillated). Less common materials used for fibres include nylon, glass, aramide and carbon. Fibres generally can be categorised as structural (steel and macro-synthetic fibres) and non-structural (micro fibres). Structural fibre post-crack performance should be specified in terms of toughness (refer to Clause 5.5). Micro-fibres are generally used to control plastic shrinkage cracking but are also useful for reducing rebound in addition to spalling of shotcrete when subjected to fire loading. The dosage rate of micro-fibres is generally specified at approximately 1 to 2 kg/m^3 of shotcrete for this purpose.

Steel fibres

Deformed steel fibres must be used at a dosage rate that does not result in balling during addition or use of the mix. The inclusion of the steel fibres in the shotcrete mix must not lead to a significant reduction in workability, pumpability or sprayability. Steel fibres must be stored in dry sealed containers until ready for use. These fibres must be free from corrosion, oil, grease, chlorides and deleterious materials which may reduce the efficiency of mixing or spray process, or which may reduce the bond between the steel fibres and the shotcrete.

Steel fibres must also comply with the following requirements:

(i) Steel fibres should comply with either ASTM A820 or BS EN 14889-1.

(ii) Steel fibres should be deformed and have a minimum recommended tensile strength of 1000 MPa and an aspect ratio between 40 and 70 for an assumed shotcrete compressive strength of 40 MPa.

The suitability of steel fibre type and dosage should be assessed from the results of toughness and/or flexural tensile strength testing during the design and the development of the shotcrete mix.

Macro synthetic fibres

Where macro synthetic fibres are used for temporary or permanent lining applications, the fibre manufacturer must demonstrate that the fibre type is not prone to creep rupture within the nominated design life when exposed to a service stress level of 60% of the post-crack residual strength for service crack widths.

Macro synthetic fibres should comply with BS EN 14889-2. Only Class II fibres should be used as structural macro synthetic fibres. Macro synthetic fibres for tunnel support typically have a length of 40–65 mm, a minimum recommended tensile strength of 600 MPa and minimum Young's Modulus of 8 GPa for an assumed shotcrete compressive strength of 40 MPa.

The suitability of macro synthetic fibre types and dosage rates must be assessed from the results of toughness or residual flexural tensile strength testing during the design and the development of the shotcrete mix. In some applications, the fire resistance of the fibre reinforced shotcrete mixture as sprayed must be considered.

Non-structural fibres

Non-structural fibres are usually taken to be Micro Synthetic Fibres. Micro synthetic fibres must comply with one of the following Standards:

(i) ASTM C 1116 Fibre Type III, or

(ii) BS EN 14889-2 Fibre Class Ia.

If used for improving resistance to spalling damage in fires, micro synthetic fibres should be made from virgin polypropylene. Micro synthetic fibres must also meet the following requirements:

(i) The fibres should be of monofilament type.

(ii) The fibres should have a melting temperature of not greater than 170 °C.

(iii) The fibres should be resistant to water absorption (when tested to ASTM D570).

(iv) The fibres should be supplied by an ISO 9001 certified manufacturer.

The suitability of micro synthetic fibre types and dosage rates must be assessed by a project specific fire study to determine spalling protection and may need to involve fire testing of fibre reinforced shotcrete panels.

Although it is recommended that fibre content is not specified, verification of actual addition of fibre can be based on a fibre-count test. However, this is an unreliable test due to the poor distribution of fibres through small samples. Fibre counting can be done using a washout test for wet-fibre reinforced shotcrete or by counting fibres in crushed cores or cracked toughness specimens. These test methods are described in Chapter 14.

6.7 STEEL MESH OR BAR REINFORCEMENT

As in conventionally-reinforced concrete, steel mesh or bars are used in situations where shotcrete is required to withstand tensile stresses. The amount of reinforcement required for structural purposes should be calculated in accordance with AS 3600. Recommended mesh sizes are any wire on a minimum of 50 x 50 mm or 100 x 100 mm grid spacing or greater, eg. SL81, SL92 or more. It is emphasised that the most serviceable structure will be obtained when the reinforcing steel is designed and placed to cause the least interference with placement. Smaller bar diameters should be used to assist encapsulation, with a 16 mm bar being the normal maximum size. Where larger diameter bars are required, exceptional care should be taken in encasing them with shotcrete. Reinforcement should be supported and held clear of the surface to be shotcreted at a minimum distance of 25 mm but always in accordance with cover requirements specified on the design drawings. Swimming pools should have a minimum cover of 50 mm. All reinforcement should comply with AS/NZS 4671. To prevent vibration of the steel bars during shotcreting, they should be tied rigidly in place.

6.8 OTHER ADDITIVES

These include coloured pigments and others listed in AS 1478.1. All additives should be used in accordance with manufacturer's recommendations and compatibility requirements.

7

Mix Design

7.1 GENERAL

Many of the principles of normal concrete technology can be applied to the mix design of shotcrete, particularly that produced by the wet-mix process. The major differences between conventional concrete and shotcrete are in maximum aggregate size, aggregate gradation, cementitious content, selection of chemical admixtures, method of conveyance and placement. Below is a non-exhaustive list of some of the issues that need consideration in the mix design process:

Pumpability – the mix must be well graded with a sufficient workability to enable it to be pumped from the pump hopper to the spray nozzle.

Sprayability – the mix must be capable of being conveyed and placed for the particular application with minimum rebound. Applications may have horizontal, vertical, or overhead surfaces.

Strength – it must satisfy early-strength and long-term strength requirements, depending on the application. The effect of set accelerators on long-term strength needs to be considered.

Compaction – the mix must be able to be compacted to form a dense, homogeneous material.

The design, testing and trialling of a shotcrete mix should be based on the anticipated conditions which will prevail on site so that, under these conditions and with the nominated application method and nozzle operators, shotcrete of the quality specified will be produced. There are two general approaches to specifications, the performance-based approach and the prescriptive approach.

- *Prescriptive specifications* focus on particulars of how shotcrete is to be proportioned, produced and placed but seldom include assessment of the in-place properties of the final product. This approach discourages innovation by constraining a contractor's ability to use new technologies and methods of application to achieve the required result more effectively. It can also promote poor practice by omitting the requirement to prove that the performance of the in-place shotcrete is satisfactory.
- *Performance-based* specifications focus on producing in-place shotcrete exhibiting a minimum level of performance that conforms to requirements determined through design. The particulars of how this is achieved are left to the contractor, thus the sprayer is encouraged to find the most effective means of satisfying the minimum levels of performance economically. This will often include a critical evaluation of every facet of production and placement which can assist in minimising poor practices. Specifications are normally tailored to the particular site application and type of structure (e.g. swimming pools or tunnels). Specifiers should take care not to specify inappropriately high levels of performance when this is not required as the result will be unnecessarily expensive shotcrete.

7.2 WET-MIX SHOTCRETE

For major infrastructure work, the design and trialling of a shotcrete mix is normally carried out in two stages. The first stage involves the design of the base mix. The trial base mix includes the proposed materials and mix proportions, all admixtures (but omitting the set accelerator) and proposed fibres at the proposed dosage (if fibre reinforcement is nominated). The second stage is the trialling of the shotcrete mix sprayed into test panels

The choice of mix proportions for shotcreting of major infrastructure work is usually based on a specified compressive strength, slump limits, density, flexural strength/toughness, drying shrinkage, permeability, durability (including exposure classifications where nominated), and site application. Pumped mixes normally contain a higher percentage of sand/fines than normal, for the purpose of lubrication and to eliminate segregation.

Proportioning the aggregates in the mix to fit previously proven combined grading limits can shorten the design process and increase the likelihood of producing a satisfactory mix design. Gradings outside the ranges shown may be used if preconstruction testing proves that they give satisfactory results, or if acceptable results are available from previous use of the

proposed combined aggregate grading. At remote sites local materials may vary and these need more detailed analysis.

Table 7.1 provides examples of recommended combined aggregate grading ranges from a variety of remote-controlled spraying applications in mining and civil tunnel projects for mixes of various maximum aggregate sizes.

Table 7.1: *Combined aggregate gradings for various specifications*

Sieve size (mm)	Percent passing for specification			
	ACI 506 Fine grading	ACI 506 Coarse grading	RMS B82	AFTES
19.0	-	-	-	-
13.2	-	100	100	100
9.5	100	90-100	90-100	85-95
4.75	95-100	70-100	70-85	60-75
2.36	80-100	50-70	50-70	45-60
1.18	50-65	35-55	35-55	30-45
0.600	25-60	20-35	20-40	20-35
0.300	10-30	8-20	8-20	10-20
0.150	2-10	2-10	2-10	7-12

It is suggested that *ACI 506 fine grading* may be used for fine aggregate shotcrete such as mortar. Sand for "finish" or "flash" coats may be finer than for this grading. However, the use of finer sands generally results in higher drying shrinkage. The use of coarser sands generally results in more rebound. The combined grading curve should be continuous and not gap graded.

Examples of accelerated concrete mix designs for wet-mix shotcrete using remote-controlled spraying, in both mining and civil tunnel infrastructure projects are shown in Table 7.2.

Typical toughness requirements for wet-mix shotcrete used in mining and civil tunnel projects in Australia are listed in Tables 5.2 and 5.3.

Equipment used for manual spraying performs differently to remote-controlled or robotic spraying rigs and, as such, the mix design should be altered accordingly. A typical wet-mix design suitable for manual shotcrete application is shown in Table 7.3.

Maximum steel-fibre dosage for dry-mix shotcrete is normally 30 kg/m^3, but can be up to 50 kg/m^3 with special equipment. The maximum dosage rate of macro-synthetic fibre possible depends on the type of fibre used but is typically in the range 5–6 kg/m^3. The maximum length of any fibre useable in dry-mix machines is typically 30 mm.

Table 7.2: *Typical wet-mix shotcrete mix designs for remotely controlled spraying in mining and civil tunnel projects*

Constituent materials	Quantity (/m^3) for Mining	Civil tunnel
Strength grade (MPa)	40	40
Cement (kg)	440	420
Cement Type	GP	SL
Fly ash (kg)	Optional	60
Silica fume (kg)	20	40
10 mm aggregate (kg)	500	450
Coarse sand (kg)	680	780
Fine sand (kg)	500	380
Total water (litres)	200	208
Steel fibre (kg) OR Macro-synthetic fibre (kg)	30–40 5–8	40–60 9–10
Water reducer admix. (litres)	1	1
Superplasticiser admix. (litres)	3	3
Hydration control admix. (litres)	2	1
Nominal slump (mm)	120–180	120–180
Water/binder material ratio	0.40–0.48	0.38–0.45

Table 7.3: *Typical wet-mix shotcrete mix design for manual spraying*

Constituent materials	Quantity (/m^3)
Cement (kg)	335
Fly ash (kg)	85
10 mm coarse aggregate (kg)	610
Coarse sand (kg)	585
Fine sand (kg)	530
Water reducer (litres)	1.6
Superplasticer (litres)	1.0
Air Entraining Agent (litres)	0.1
Water (litres)	200
Slump (mm)	60

7.3 DRY-MIX SHOTCRETE

Aggregates should be proportioned to fit similar combined aggregate grading as for wet-mix shotcrete. A typical dry-mix shotcrete mix is shown in Table 7.4.

Typical toughness requirements for dry-mix shotcrete used in Australia are given in Table 5.2.

Table 7.4: *Typical dry-mix shotcrete mix design*

Constituent materials	Quantity (/m^3)
Strength grade (MPa)	40
Cement (kg)	420
Silica fume (kg)	50
7-mm aggregate (kg)	350
Coarse sand (kg)	755
Fine sand (kg)	625
Steel fibres (kg) OR	30–40 OR
Macro-synthetic fibres (kg)	5–8
Accelerator admix. (litres)	20 (as required)
Superplasticiser admix. (litres)	Nil
Water reducer admix. (litres)	Nil
Air Entraining Agent (litres)	Nil
Water (litres)	150–200 (controlled at nozzle)

For overhead application, the mixes can be proportioned to the finer side of the gradation envelope, to the middle for vertical applications, and to the coarser side of the gradation for downward application.

7.4 SWIMMING POOL MIX DESIGN

For swimming pool work the design of a shotcrete mix has traditionally been based on particular strength grades and trial results from past work. Swimming pool mixes are typically similar to the design listed in Table 7.3 but with no superplasticiser.

Australian Standard AS 2783 sets out requirements for the structural design and construction of swimming pools constructed wholly or partly of either cast in situ or sprayed concrete. AS 2783 applies to pools with a surface area not greater than 100 square metres and with an overall length not greater than 15 metres. The Standard advises that the requirements set out in the Standard may be applied to larger structures but may not necessarily be sufficient for such structures.

AS 2783 also states that the structure shall be designed and constructed in accordance with the requirements of that Standard and the requirements of AS 3600 and AS 3735 as applicable.

The following recommendations are made in relation to shotcrete mix designs for swimming pools in general. It is recommended that the mix design should generally be in accordance with AS 2783 with the following to be emphasised (where they are currently called up) and the additional requirements adopted.

- Materials used to be in accordance with AS 1379.
- Minimum cementitious content of the shotcrete to be 350 kg/m^3.
- Maximum water/binder ratio to be 0.55.
- Maximum size of of aggregate to be 10 mm. Blast furnace slag aggregates should not be used for swimming pool applications due to popout/staining issues.
- Combined aggregate grading to comply with one of the combined grading envelopes shown in Table 7.1. Combined gradings outside these ranges may be used if pre-construction testing proves they give satisfactory results or if acceptable results are available from previous use of the proposed combined aggregate grading.
- Minimum 28-day characteristic compressive strength to be 25 MPa.
- 28-day compressive strength capability of the proposed shotcrete mix to be verified prior to supply by compressive strength testing. This should be carried out at the age of 28 days for standard cylinder specimens made from the mix as supplied or from core specimens taken from test panels of shotcrete and cured under standard conditions. It is recommended that the minimum acceptable 28-day compressive strength test result should be 32 MPa for standard cylinder specimens cast from the shotcrete as supplied and 25 MPa for cores taken from test panels.

7.5 SPECIAL MIXES

Shotcrete is occasionally required to exhibit special properties (e.g. low density, insulating qualities, resistance to heat, resistance to acids, requirements for a special aggregate finish).

Lightweight aggregate mixes are being sprayed in increasing quantities for wall and ceiling construction. Lightweight shotcrete is best adapted to thin, lightly reinforced sections. Particular care should be taken in planning and executing the job where structural members are involved. Perlite and vermiculite manufactured aggregates provide low-density concrete in the range of 400–1000 kg/m^3 (Neville, 2002). It should be noted that these aggregates should be moist surface saturated prior to mixing, and mix trials should be

carried out for strength, density, and shrinkage values. Mixes may need to be refined to achieve suitable pumpability.

Shotcrete is frequently employed for fireproofing structural-steel members, and lightweight aggregates are sometimes used in these mixes. The shotcrete also strengthens the members and can be included in calculations of gross structural section.

High-alumina cement is preferred over Portland cement for certain applications where rapid hardening or where heat resistance or acid resistance is desired. For refractory linings, calcium-aluminate cement is commonly used in combination with a heat-resistant aggregate. Suitable lightweight aggregates include natural volcanic aggregates such as scoria and pumice, and manufactured aggregates such as expanded clay, shale and blast-furnace slag. These products make good moderate-to-structural-strength concrete.

It should be noted that calcium-aluminate cement should be fully investigated for any particular application because of its fast-setting properties, its high early heat of hydration, and possible reduction of long-term strength by the process known as conversion. Concrete made with calcium aluminate cement is also highly susceptible to sulphate attack associated with, for example, sea water. Additional information on the performance of this type of cement is dealt with by Neville (2002).

Successful shotcreting of special mixes may require different placement techniques, methods of installation, and equipment. Only applicators with the requisite expertise and experience should be used. Additional information on refractory applications may be found in ACI 547R and ACI Special Publication No. 57. Recommendations of the cement and aggregate manufacturers should generally be followed in this matter.

Abrasion-resistant shotcrete mixes are based on carborundum or other hardwearing aggregates. The matrix of the mix is different to normal shotcrete and should be specified by an engineer with expertise in this area.

7.6 COMBINED AGGREGATE GRADING CURVES

The combination of the gradings of the individual aggregate fractions within a shotcrete mix should be such as to provide: minimum segregation while the shotcrete is being conveyed, good pumping and spraying characteristics, low rebound, and maximum density when it is placed. It is therefore necessary to check the combined grading of the aggregate particles of all of the aggregate fractions in the proportion in which they are to be used in the shotcrete when the proposed design of the shotcrete is being considered.

The following example demonstrates how the combined aggregate grading can be determined from the proportion of each individual aggregate fraction in the mix design. In the example it is assumed that all of the aggregates have the same specific gravity. The physical composition of shotcrete and concrete is, however, based on volumetric proportions. If the specific gravities of the individual aggregate fractions differ appreciably from one another, the proportions should be adjusted accordingly (e.g. for normal dense weight aggregate and lighter weight aggregate). The aggregate quantities and proportions for the particular mix design used this example are as follows (aggregate quantities on a saturated surface dry basis).

The accompanying Table 7.6 shows how the combined aggregate grading is calculated. The heading immediately above the Table identifies the information contained in the columns immediately below (e.g. sieve sizes, aggregate nominal size and its grading), particular proportion (%) of that size aggregate of the total aggregate and the calculated combined aggregate grading (being the sum of columns 3, 5, 7 and 9 for each separate sieve size. Column 1 of the Table shows the sieve sizes (mm) used in the sieve analysis of the aggregates. For a maximum size of 10 mm, these sizes are arranged in reducing size from 13.2 mm to 0.150 mm (150 microns). 0.075 mm is also normally included as the minimum sized fraction.

The gradings (percentage by mass passing the particular sieve size) for each aggregate in the

Table 7.5: *Example aggregate fractures in a typical shotcrete mix*

Aggregate description	Mass of aggregate (kg/m^3 of shotcrete) (saturated surface dry)	Proportion of total aggregate (by mass)
10 mm aggregate	235	14%
5 mm aggregate	265	16%
Coarse sand	680	40%
Fine sand	500	30%

Table 7.6: *Example calculation of combined grading for a shotcrete mix using materials listed in Table 7.5*

Sieve Size (mm)	10 mm aggregate (14%)		5 mm aggregate (16%)		Coarse sand (40%)		Fine sand (30%)		Combined aggregate grading
	Individual grading (%)	Contribution to combined grading (%)	Individual grading (%)	Contribution to combined grading (%)	Individual grading (%)	Contribution to combined grading (%)	Individual grading (%)	Contribution to combined grading (%)	Sum of columns 3, 5,7 & 9
13.2	100	14	100	16	100	40	100	30	100
9.5	92	13	100	16	100	40	100	30	99
4.75	6	1	86	14	100	40	100	30	85
2.36	0	0	8	1	93	37	100	30	68
1.18			0	0	84	34	100	30	64
0.6					60	24	79	24	48
0.3					25	10	43	13	23
0.15					2	0.8	4	1.2	2
0.075					1	0.4	3	0.9	1.3

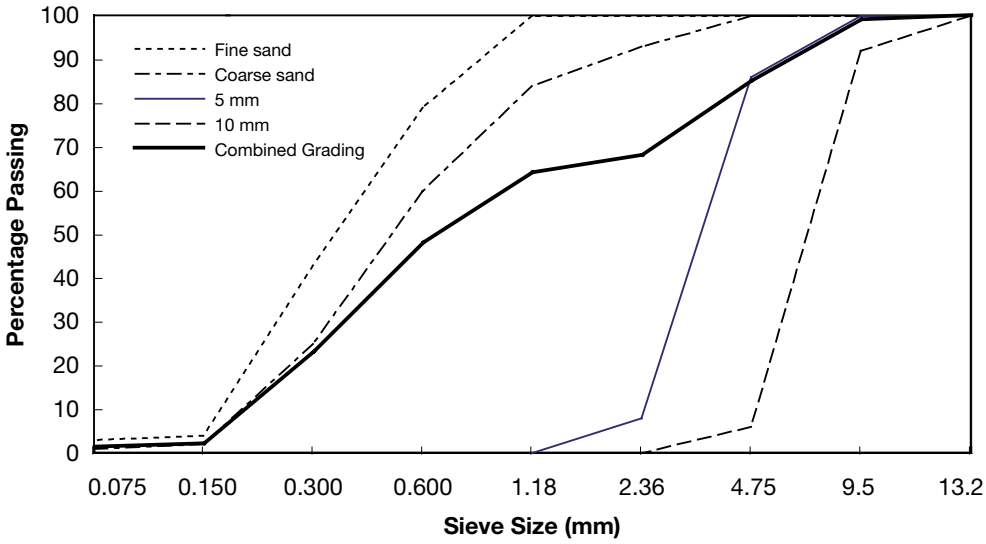

Figure 7.1: *Individual and combined grading curves for aggregates in example*

mix are shown in Column 2 (10 mm agg.), Column 4 (5 mm agg.), Column 6 (Coarse sand) and Column 8 (Fine sand). The contribution of each aggregate to the particle sizes of the combined aggregates is calculated by multiplying the proportion of the total aggregate content of the particular aggregate by the percentage of that aggregate that passes the particular sieve size being considered. This is shown in Column 3 for 10 mm agg., in Column 5 for 5 mm agg., Column 7 for Coarse sand and Column 9 for Fine sand.

For example, the contribution of the 10 mm agg. to the pass 13.2 mm size is 100% multiplied by the 14% being the proportion of the total aggregate that the 10 mm agg. contributes ie 14%. Similarly, the contribution of the 10 mm agg. to the pass 4.75 mm size of the total aggregate content is 14% of 6% which is rounded off to 1% (Column 3).

The Combined Grading of the total aggregate for this particular mix design is shown in Column 10 (being the sum of the respective values in Column 3, 5, 7 and 9 for that sieve size), i.e. 100% pass 13.2 mm, 99% pass 9.5 mm, 85% pass 4.75 mm, 68% pass 2.36 mm, 64% pass 1.18 mm, 48% pass 600 microns, 23% pass 300 microns and 4% pass 150 microns. Once the Combined Aggregate Grading has been determined it can be judged for likely suitability by comparison with the various recommended combined grading ranges or others that have been shown to be suitable in practice. Computer-based spreadsheets can easily be developed to implement the method of combining grading curves shown above.

As per Figure 7.1, “gap grading” of combined aggregates can occur (between 2.36 and 1.18 mm sieves), and if not able to be resolved through alternative

material sourcing other mix design considerations may be available to minimise the impact on the shotcrete properties.

7.7 MIX DESIGN TROUBLESHOOTING

7.7.1 Pumping and Blockage Problems

Concrete pumpability is defined as the capacity of a concrete under pressure to be mobilised while maintaining its initial properties (Gray, 1962; Beaupré 1994). The research efforts reported in recent times on the pumpability of concrete usually focus on either the stability of concrete under pressure, or on its mobility under pressure.

In relation to stability the main concern about fresh concrete under pressure is the possibility of segregation, i.e. the separation of the paste from the aggregate phase, which usually leads to line blockage. This phenomenon occurs when the pressure applied to the concrete pushes the paste through the aggregate skeleton leading to the accumulation of coarser particles in the form of a plug that blocks the line (Browne & Bamforth, 1977). This segregation, or forced bleeding, is often associated with mixtures having poor grading and/or shape of aggregate particles or excessive wetness in the mix.

Shotcrete normally lacks a sufficient coarse aggregate fraction above 4.75 mm to exhibit much interference between these particles. Despite this, blockages are commonly composed of the larger coarse aggregate particles that have become separated from the finer fractions and accumulate at a constriction or point of high friction in the line. Efforts to prevent blockages through mix design improvements should focus on refining the combined grading curve to produce a smooth and continuous curve from 4.75 mm down. In addition, the coarse aggregate fraction (4.75 mm and above) should not exceed 500 kg/m^3. As a rule of thumb, about 20% of the combined aggregate content of a mix must pass the 300-micrometre sieve, and at least 450 kg/m^3 of cementitious materials and aggregate must pass 150-micrometre in order to pump adequately.

7.7.1.1 *Common Causes of Blockages*

A mix containing a well-graded aggregate will exhibit constructive mechanical interference between particles of differing size to prevent separation under the action of a pressure gradient. This helps the concrete stream to move uniformly through the line in response to a pressure gradient. In a poorly graded mix this interference is diminished or absent so fine particles flow between the coarser particles causing the coarser aggregate particles to become separated from finer particles and accumulate into a plug. The causes of poor aggregate grading may include: inconsistent moisture contents in the aggregate fractions as they are batched that are not compensated for by adjustment to weights, or washing out of fine fractions from stockpiles due to heavy rain, or poor monitoring during crushing or extraction.

Separation of particles and subsequent blockages are made worse by high pumping pressures. Any factor that increases resistance to flow, and thus necessitates increased pumping pressure, will lead to a greater tendency for blockage formation. The phenomenon is made worse by high friction associated with insufficient lubrication caused either by a rough line wall or inadequate paste in the mixture. Blockages are commonly associated with constrictions such as reducers in the concrete line and very long pumping distances. The use of excessively long rubber hoses, tight radii in either steel or rubber hoses, or excessively short reducers are all commonly associated with blockages. The rubber hose that is suspended from a remotely-controlled manipulator arm is particularly susceptible to blockages. When a blockage occurs in this hose it is therefore useful to lay the line flat and straight to unblock it. Stubborn blockage problems may possibly be overcome by changes to the line geometry to reduce the resistance to flow.

All rubber gaskets used in the connector clamps for each section of delivery line, either steel pipe or rubber hose must be in good condition. This is to avoid the loss of moisture while pumping. Leaking gaskets cause dry sections at joints and reduces the internal diameter of delivery line therefore increasing pump pressures. Also, the dry sections tend to break apart over a long shift and do get caught at the next point of reduction i.e. reducer or just prior to the nozzle.

The pumping equipment must be well maintained. There are moving parts designed to wear within the pumping hopper (see Figure 7.2 “piston inlets”). The moving parts called “wear rings” move across the stationary “wear plate”. These two surfaces

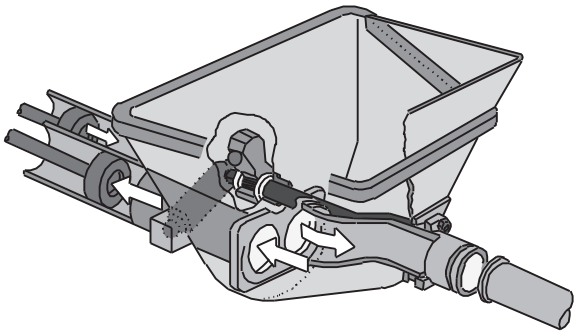

Figure 7.2: *Concrete flow sequence in a piston pump showing swing arm moving between piston inlets*

are made of very high-grade material. The connections outside the hopper must be adjusted as required to ensure the gap between these two surfaces is maintained to manufactures' specification. Similar to a leaking gasket, the same problem with pump pressure and potential release of what is called "build-up" most definitely will cause blockages. If not maintained any unforgiving mix will only amplify this problem.

Low viscosity in the mix will encourage separation of particles. An alternative to a change in grading to alleviate blockages is therefore a reduction in slump. Mobility of fine particles relative to coarser particles is increased (that is, made worse) by raising the fluidity of the fine particle (paste) fraction. Reducing the slump, and thus the fluidity, may help to reduce blockages, but will not overcome pumping problems associated with very poorly graded aggregates.

Finally, after mix adjustments have been performed to overcome segregation or blockages, there are a range of admixture options such as viscosity or rheology modifying admixtures to improve the cohesion of the mix.

Excessive *porosity* and especially *vesicularity* in coarse aggregates can also lead to pumping problems. Such aggregates should be batched in the SSD condition to try to minimise problems. Flaky and misshapen aggregate particles are also problematic with regard to pumping. The proportion of misshapen aggregate particles that is permissible in a shotcrete mix should be no more than 10% which is lower than is acceptable for cast concrete. Any attempt to rectify deficient aggregate gradings or shape characteristics by adding more cement is usually counter-productive because additional ultra-fines will increase the tendency to separation.

Solutions to pumping and blockage problems should, in most cases, be possible through attention to the development of a smooth and continuous combined grading curve with particular attention paid to the finer fractions. The fine fractions may vary widely in the original aggregate source or they may be washed out by rain in a stockpile. If the fine fractions cannot be controlled adequately in the original source, then it may be necessary to wash the coarse aggregate and sand fractions to remove the fines, establish the grading of the washed fines, and re-introduce fines in controlled amounts through the use of, for example, crusher fines, graded silt, calcined clay, or a "fatty" builder's sand. The shape of the grading curve at the fine end is thereby constrained more tightly than would otherwise be possible. If this is deemed too expensive (because washing aggregate is costly) entrained air may possibly be used as a substitute because entrained air bubbles act like fine aggregate particles in suspension. However, this will only work for low pressure pumping over relatively short distances.

The use of air entrainment may assist with pumpability, workability and cohesion, but care should be taken to not adversely impact durability and permeability aspects, and volume/yield adjustment should also be checked. Alternately, the cohesion of the mix may be increased through the use of micro-synthetic or fibrillated synthetic fibres or some form of supplementary cementitious material. These small fibres help to hold the coarse and fine particles together in a flowing material and produce an effect similar to increased cohesion.

7.7.1.2 ***Changes in Air Void System***

A common problem associated with pumping is modification of the air void system. Indeed, the use of pumps to transport concrete generally results in a loss of air ranging anywhere from one to three percent (Du & Folliard, 2005). It has also been shown that the resulting air-void system possesses no or very few bubbles with diameters below 50 μm (Pigeon et al., 1996). The mechanisms believed to be responsible for this phenomenon are suction and dissolution during the pumping or placing process.

The suction mechanism occurs when the concrete is subjected to negative pressures. In a piston-actuated pump, the piston-chamber fills up with concrete not only by gravity action but also by a suction effect caused by the retracting piston. This movement causes a decrease in pressure, which can cause the air

to expand to larger bubbles and (later) escape from the concrete. This phenomenon can also be observed in a vertical section of hose where the concrete is in free fall.

The dissolution mechanism is explained by Dyer (1991). While the concrete is pressurised upon pumping it is believed that the smaller air bubbles dissolve in the surrounding water (Figure 7.3). When the concrete depressurises upon exiting the line, thermodynamic rules show the air returns, but within the larger bubbles that did not previously completely dissolve instead of forming new small air bubbles.

In addition to the dissolution mechanism, the pressurization time and maximum pressure reached are also important parameters in the air loss effect. It is important to emphasise that this mechanism does not alter the air content significantly. The final air volume remains practically the same but alters the spacing factor. However, the stability of the larger air bubbles formed is such that these bubbles will escape more easily upon handling and consolidation of the concrete, hence the reported air losses. Given that at least a part of the workability of wet shotcrete is attributable to entrained air content it follows that pumping can reduce the workability of shotcrete.

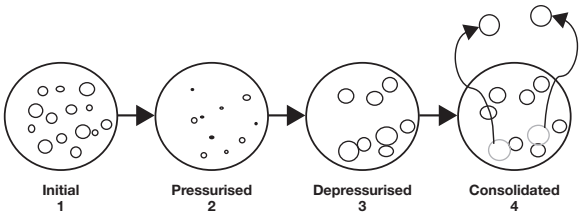

Figure 7.3: *Air loss during and after pumping, according to Dyer (1991)*

7.7.1.3 *Minimum Paste Content*

The thickness of the paste boundary during flow varies with the type of line used to pump the concrete (typically, steel tube or rubber hose). The proportion of paste available within a mix that is required to lubricate the line surface also varies with the diameter of the line. Small diameter lines require a higher proportion of the total available paste than large diameter lines. This partly explains why it is easier to pump concrete through a large diameter line than through a small diameter line. The condition of the internal pipe lining may impact loss of paste, particularly dependent on the degree of initial priming performed.

Work by Jolin & Beaupre (2000) and Jolin et al. (2009) has shown that the paste content of the mix has a major influence on the pumpability of concrete and that the air content of the paste must be considered when estimating the useful amount of paste available. The Active Paste Concept is defined as the amount of paste (%) present in the concrete while under pressure in the line, which represents the amount of paste required to create the lubricating layer against the line wall and to fill the inter-granular voids. This is a volumetric interpretation of the paste content as the material is under pressure. The actual paste volume diminishes as pressure is applied to the concrete since the air volume diminishes to negligible values.

To estimate the minimum active paste content required to obtain pumpable shotcrete it is necessary to know the porosity of the aggregate fraction (that is, the volume proportion of space between aggregate particles), the density of the paste fraction, the percentage air content, and the diameter of the line through which the concrete is to be pumped. Based on estimates derived by Jolin et al. (2009), the minimum active paste content for a 50 mm line is about 33% (by volume) and for a 75 mm line is about 30%. Note that these estimates are subject to slight variation based on the grading characteristics of the aggregate. To obtain the total paste content required for the production of a suitable mix one must add the entrained air content which is about 3–4% (of the total concrete volume) for normal shotcrete (with no AEA) or about 8–15% (of the total concrete volume) when an AEA is used. Air meters are best suited for determining air contents, but for air contents in excess of 10% one may have to rely on changes in wet density to estimate air content. These estimates of minimum paste content are for pumping requirements only and do not necessarily indicate good spraying or adhesion characteristics.

7.7.2 Shotcrete Not Sticking to Substrate

When spraying onto a vertical or overhead substrate it is necessary that the shotcrete stick to the surface for a sufficient period of time while in the wet state so that it can harden and remain in place permanently. Failure to stick to the surface can lead to the concrete sagging or falling off entirely, all of which require avoidable and/or expensive repair. In many cases fallouts will also compromise the ability of the shotcrete to stabilise ground. A sticky mix that remains firmly in place after spraying is completed presents many advantages to the contractor and owner.

Failure of shotcrete to stick to the surface may be caused either by insufficient adhesion between the concrete and substrate or insufficient cohesion within the concrete itself. Inadequate adhesion is usually manifested as fallouts of wet shotcrete with debonding clearly taking place at the substrate boundary. Inadequate cohesion can be manifested in many ways but is commonly revealed by separation of the majority of the lining from a boundary layer of (often wet looking) concrete that remains attached to the substrate.

7.7.2.1 *Adhesion problems*

Inadequate adhesion can be caused by:

1. Inherently low adhesive paste characteristics. Most cement paste exhibits a degree of stickiness, but exceptions occur and when low stickiness is apparent the cement may require supplementation with amorphous silica powder or similar materials. Finely ground inert fillers such as calcium carbonate powder also assist adhesion.
2. Poor spraying technique such as spraying from an excessive distance, low or excessively high air pressure, or building up too thick a layer in one pass.
3. A dry and/or dusty substrate surface leading to moisture depletion in the contact zone, desiccation of concrete, and bond loss. The solution to this situation is to pre-wet the substrate.
4. Dirt on the substrate which is often caused by caked-on material from construction activity or dust and rebound from earlier shotcreting operations. The solution to this problem is high pressure water-jetting or cleaning prior to shotcreting.
5. Oil on the substrate. This can be caused by hydraulic oil mist from faulty construction or mining equipment. Oil on the substrate must be removed if bond is to be achieved. Hydraulic fluid should never be used to lubricate the concrete line prior to pumping because of the health risk posed by hydraulic fluid aerosols and the risk to bond development on nearby rock surfaces and possible detrimental effects on the mix.
6. Excessive water on substrate, often associated with ground water inflow. This can be a difficult problem to solve. Fall-outs can sometimes be overcome by spraying very rapidly and using a high dosage rate of set accelerator, but this will compromise the long-term performance of the concrete. An alternative that can work in circumstances involving point inflows of water is to install an intermediate substrate such as a strip drain, or a Coredrain blanket, to create a diversion path for water pressure to be relieved, or injection of rock strata. One can also spray the lining around the points of wetness or water ingress, let this set, install a drain to relieve water pressure at the point of ingress, and then complete the difficult area by spraying a mix containing 2 kg/m^3 of micro-synthetic fibre in a bridging fashion between adjacent areas of hardened shotcrete. A second alternative is to first bolt a layer of mesh over the difficult area and use this as an anchoring scaffold for a subsequent layer of fibre reinforced shotcrete. Most options for tackling areas of high-water inflow are slow and expensive but few alternatives exist.

It must be noted that wet shotcrete falling off with a rock attached probably indicates inadequate scaling prior to spraying and does not necessarily indicate poor adhesion. Flaky ground comprising, for example, shale, schist, or phyllite, may be particularly prone to fall-outs if the layering has an unfavourable orientation. Mechanical or hydro-scaling may possibly remove the loose pieces of ground, or mesh may be used as a bridge for the FRS over particularly flaky areas.

7.7.2.2 *Cohesion problems*

Poor cohesion of shotcrete is typically manifested in two ways. The first is related to cohesion as a property of wet concrete prior to spraying. This type of cohesion is a property of shotcrete in the plastic state that is related to its propensity to segregate during mixing and placing if it not well proportioned or mixed effectively. Poor cohesion can lead to segregation which Neville (2002) defined as separation of the constituents of a heterogeneous mixture so that their distribution is no longer uniform. Attention to aggregate shape and grading is as important as care in transport and handling of shotcrete for the avoidance of segregation. Maintaining the cohesion of a shotcrete

mix through careful design and the minimisation of water of convenience reduces the likelihood of heavier aggregate settling out of the mix and also reduces the potential for the paste component formed by the water and cementitious fractions to separate from the aggregates during transportation and when subjected to a pressure gradient.

The second manifestation of poor cohesion in shotcrete occurs in the shotcrete as sprayed onto the substrate. This type of poor cohesion can lead to fall-outs from overhead sprayed surfaces and sagging of wet shotcrete on walls.

Inadequate cohesion can be caused by:

1. *Poor mix design*. Use of well-graded aggregates with good shape characteristics and careful attention paid to the fine fractions will aid cohesion but may not be sufficient to overcome cohesion problems if the shotcrete is excessively wet.
2. *Poor cementitious fraction.* General purpose cement on its own may not create a sufficiently cohesive mix, so consider including amorphous silica powder or similar materials. Users should be aware that cement will normally contain limestone mineral addition hence care should be taken when adding further mineral additives. The fineness of the cement will also affect cohesion and water demand and therefore should be monitored.
3. *Low set accelerator dosage rate.* Set accelerators are essential when spraying overhead but optional when spraying vertical surfaces. Not only must an adequate dosage rate of set accelerator be used to keep shotcrete in place overhead, but an accelerator that is chemically compatible with the cement is required. If the accelerator is either too old, chemically incompatible, or the concrete temperature is too low, then adequate stiffening may not occur resulting in poor cohesion.
4. *Irregular dosing of set accelerator* which can lead to the creation of non-accelerated lenses of concrete within a lining that lack the cohesion of set accelerated shotcrete. This problem is exacerbated by the use of hydration stabilisers as this can allow the non-accelerated lenses to remain fluid and cohesionless for a long period after spraying. Methods of dispersing set accelerator uniformly into a stream of concrete at the nozzle are described in Section 8.4.3.
5. *Excessive fluidity can exacerbate cohesion problems.* Cohesion generally falls as slump increases, so excessively wet shotcrete may be prone to internal ruptures leading to fall-outs. High moisture content within a mix can lead to internal bleeding which will cause ruptures and therefore must be avoided. Viscosity and Rheology modifying admixtures may be used to improve cohesion and stability of the mix. Additionally, the use of an Air Entraining Agent (AEA) to create workability in the mix prior to spraying rather than relying exclusively on water or a water-reducing admixture is one means of improving cohesion within well compacted in-place shotcrete. However, excess entrained air must be eliminated by proper compaction during spraying and steps should be taken to ensure this has been achieved. Care is required when using this approach to cohesion enhancement and expert advice should be sought.
6. *The cohesion of wet shotcrete* may be aided by the inclusion of 1–2 kg/m^3 of synthetic micro-fibres. The fibres should have a diameter in the range 6–35 μm and a length of up to 12 mm. Adding these to the mix prior to agitation will lead to some loss of slump that should not be compensated for by addition of water. Adding a suitable superplasticiser or about 8–15% entrained air through the use of an AEA to recover the lost slump will generally result in spraying characteristics similar to or better than the original shotcrete without micro-fibres.

Cohesion is best assessed in the field by spraying an inverted cone of concrete onto an overhead surface without the use of set accelerator. Spraying should be continued until the cone of concrete falls off, whereupon the maximum build-up capacity prior to failure can be estimated. A low cohesion concrete will typically sustain a maximum build-up capacity of only 50 mm, normally cohesive concrete can manage 100–120 mm, and highly cohesive concrete can sustain at least 150 mm of build-up capacity before collapse. If build-up capacity is limited by a cohesive failure, then the build-up capacities listed above will typically increase as the slump of the concrete is reduced and will substantially increase when a set accelerator is

added. Experience has shown that adhesive failure will typically limit maximum build-up capacity to 250–300 mm even for the best shotcrete mixes regardless of slump and set accelerator usage.

7.8 DROP PIPES

Drop pipes are used in some deep underground mines to provide efficient transfer of shotcrete from the surface to the lower working levels in the mine. For instance, at Mt Isa Mines, Australia, the shotcrete can be dropped up to 900 m. Typically the shotcrete is delivered into the drop pipe at the surface from a conventional transit mixer and collected underground in an underground agitator truck.

Key aspects to drop pipe design are:

- Diameter varies from 150 to 225 mm with 200 mm considered optimal.
- The vertical pipe must be plumbed without bends or deviations to prevent uneven wear.
- The design of the remixing kettle at the base of the drop pipe.

There are two types of drop pipe delivery: plug flow, and free fall. In plug flow, the mix maintains its cohesion and does not segregate. This is essential when delivering material directly to a structure (i.e. shaft lining). Smaller diameter pipes are required (150 mm or less) and slump control is critical. Risk of line blockage is relatively high with this method. In free fall delivery method, the material segregates as it travels down the pipe but remixes in the mixing kettle at the base of the drop. The kettle is essentially a pipe with a blank end. It is made from very thick steel sections as it is subject to very high wear and tear.

Drop pipes in Australian mines all use the free fall method to minimise the risk of blockages as these are time consuming and expensive to repair. Generally, a nominal slump of 250 mm is recommended, however slump flow/spread (600 mm) may be more appropriate, and the mix is stabilised to provide at least 6–8 hours of workable life. Fibres can be added prior to transfer but some mines, fearing blockages, elect to add the fibres to the mix underground. In this regard, polypropylene fibres impart less abrasion to the drop pipe.

It is essential to prime (slick) the pipe prior to use. The large surface area of the pipe wall can retain a surface film of cement paste sufficient to radically alter the consistency of the mix. This can be overcome by priming the pipe with up to 0.2 m^3 of shotcrete which goes to waste. In addition to this a special lubricating agent for concrete delivery pipes is often used. The underground receiving facility must be designed to cope with such waste. If the pipe is used continuously (say a load every 2–3 hours) and sufficient levels of set stabiliser are used, then it does not need to be washed out between loads. However, it is essential to wash the pipe thoroughly at each break in transfer and at end of shift. The pipe must be maintained free of build-up, leakages, and wear to function effectively.

Rapid wear is a problem in many drop pipes. To promote long life, the drop pipe must be kept straight and free of hardened concrete build-up since this will cause local wear as the rapidly passing concrete is forced to change direction. Ceramic lining of steel pipes or internal welding (to about 5–7 mm additional thickness) can be applied to assist the long term wear of pipes.

7.9 VERTICAL/INCLINED DOWNGRADE PUMPING

Pumping and blockage problems can also happen when pumping vertically down at distances further than 20 m, (the exact distance varies with the mix). Free fall can occur in this situation, leading to possible segregation. Pumping concrete/shotcrete downhill is often required for the lining of a shaft where the concrete is pumped from the top of the shaft down to the level of application. The concrete or shotcrete can fall faster than the pump speed. To avoid this a series of directional changes in the vertical section of delivery line can be implemented, i.e. an S bend, a horizontal section for several metres and return to vertical, in extremes cases a loop can be used and is very effective. Installation of a vertical delivery line must be bolted to the strata over these distances when directional changes are made. This can be repeated due to the overall depths. This allows the pump to catch up and maintain pressure on the entire line. This is critical to avoid segregation at the bottom of the delivery line. Drop delivery lines also have enormous potential for blockages at reducers if this is not considered. At the base of the vertical line a minimum of 10 m of horizontal line is required before reducing.

8

Shotcrete Finishes



Figure 8.1: *Gun finish on natural ground surface*

8.1 INTRODUCTION

A raw shotcrete surface is usually quite uneven and rough. This is known as a "gun finish". This is the most economical surface finish because the surface is left "as sprayed" from the nozzle and unfinished. A gun finish is usually satisfactory for structures such as tunnel and mine linings, and stabilised slopes that are seldom visible to the public. However, this type of finish is often inadequate for structures that are highly visible to the public, and for this reason a variety of surface finishes have been developed that are more aesthetically pleasing. Almost any finish is possible for a shotcrete structure, however finishing is a labour-intensive activity and will therefore increase the cost of the structure.

This Chapter provides examples of the various finishes that can be achieved together with advice about producing these finishes.



Figure 8.2: *Normal gun finish*



Figure 8.3: *Wood float finish*

8.2 TYPES OF FINISH

Most shotcrete finishes are specified to improve aesthetic appearance, but others are produced for the purpose of improving the function of the surface, such as ease of cleaning, reducing abrasion to trafficable plant and equipment or people or reducing friction for passing water or air.



Figure 8.4: *Steel trowel finish in a culvert*

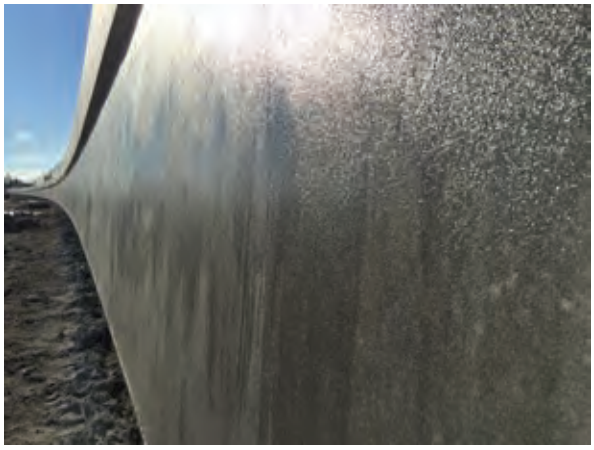

Figure 8.5: *Wood float and sponge finish*

The most basic "gun finish" is typically pitted as a result of the impact of aggregate particles into the wet surface during spraying. This finish is not suitable for many applications, such as high traffic pedestrian areas, water tanks and any structure requiring straight edges. When a more geometrically regular surface is required, a screeded surface can be produced by running a straight edge over the surface while the shotcrete is still wet in order to create a desired profile. Screed lines or guides are installed to which the surface is cut. Cutting the wet surface of a freshly sprayed wall will generate an excess of screed waste that falls to the ground and is usually disposed of. A screeded surface is suitable for cavity walls, air plenums, pools, and tanks that require a secondary lining of tiles, render, etc. A screeded surface may match a profile but the surface is not closed and includes aggregate drag marks caused by the screeding process. Screeding is therefore often followed by floating to close up the surface. Wooden



Figure 8.6: *Patterned finish to suit nearby environment*



Figure 8.7: *Blockwork produced in shotcrete*

floats and then sponges can offer a render-like finish, or steel trowels can produce a glassy finish. Areas where a sponge finish is suitable include car parks, basements, and pedestrian accessible areas. A steel trowel finish is best for tanks, drains, water courses and floors. Another option is to spray and dust the screeded surface whilst the shotcrete remains wet. This will offer a more uniform, controlled and more aesthetically pleasing version of the gun finish.

Another alternative to smooth finishes is patterned finishes, usually intended to resemble cast concrete or pre-cast panels, or a non-concrete surface such as masonry or blockwork. A “cast” concrete surface usually requires a high degree of smoothness and flatness, with careful attention to jointing or grooving. Embankments, retaining walls, bridge abutments and the like can be made to resemble pre-cast concrete panels very effectively.

Patterned surfaces can be created through the use of stencils or hand-trowelling. When hand-trowelling, the limits of what is possible depend entirely on the skill of the artisans producing the pattern. Masonry, blockwork and other repetitive patterns can be aided through the use of stencils, and highly skilled artisans can hand cut or trowel joints quite productively. This can be particularly



Figure 8.8: *Waterfront blockwork made with shotcrete*



Figure 8.9: *Coastal structures made in shotcrete to resemble sandstone blockwork*



Figure 8.10: *Simulated rock on roadside*

effective for retaining walls and marine walls (Figure 8.9). All types of patterns are usually made more attractive by introducing colour to the surface. This can be done by including oxides/pigments in the base concrete, and/or spray-on coloured stains and paints that introduce local variations that more accurately reflect the variations in both natural and manufactured surfaces. Artistic skill is paramount in producing all these surface effects, and trials are necessary before starting a job to demonstrate the skills required for a particular desired finish. It must be noted that producing a required finish is more difficult when presented with unsuitable shotcrete mix designs, working at height, under adverse lighting or inclement weather conditions. Extensive consultation and shotcrete trails to replicate the actual site and design conditions are required before attempting a challenging surface.

The use of shotcrete to simulate native rock (also called “mock rock”) requires a high degree of artistic, creative and technical skill in sculpting, blending colours, and creating surface textures. The base shotcrete mix can include a basic oxide or pigment colouring. The artist then blends additional oxides/pigments, stains and paints (Figure 8.11) into the surface to create local colour variations. When the sculpting is completed, the surface can be etched with acid to produce an “instant weathered” appearance.



Figure 8.11: *Simulated “mock rock” in a bush setting*



Figure 8.12: *Pedestrian area with shotcrete to simulate pre-cast panels, wood float sponge finish with grooving*

Specifications and planning for shotcreting in tunnels and other infra-structure applications need to consider aesthetic finishes in addition to structural and durability considerations. In Australia, shotcrete is generally applied using remotely controlled equipment within tunnels and results in a gun finish. However, hand-sprayed gun or finished shotcrete is sometimes required to improve appearance over the structural shotcrete in elements such as tunnel entrances, portals, retaining walls, station box excavations, etc. To facilitate this, pre-planning and specifications must include provision for “aesthetic shotcrete” and surface treatments. This is because the required slump and setting characteristics for this type of shotcrete are different from that for set accelerated structural shotcrete and the mix designs are likely to differ significantly.

8.3 APPLICATION PROCESSES

The processes used to create a required finish can vary substantially depending on the structural requirements of the element, the finish required, and on-site conditions. For elements with a structural function, the thickness of un-altered shotcrete must be sufficient to satisfy structural requirements. Additional shotcrete is then applied over the structural shotcrete (sometimes at the same time as the structural shotcrete is placed) and used to create the desired finish whilst maintaining structural cover requirements of reinforcement.

Most shotcrete finishes can only be achieved using shotcrete lacking a set accelerator. When creating shotcrete walls with a specified minimum structural thickness, over-break on the back face of the wall (usually arising from an irregular or over-excavated ground profile) can occur. Shotcrete used to fill this over-break has been referred to as “dental shotcrete”. Both the dental and structural shotcrete can be set accelerated to assist placement, however accelerated shotcrete should never be sprayed through more than one layer of reinforcement or through reinforcement to extreme depths. This is because accelerated shotcrete sticks to and sets as it hits the first reinforcement layer and can therefore compromise compaction beyond this point. To avoid this issue is it recommended to apply a dental layer to fill the over-break bringing the substrate back it its desired baseline and, upon completion, install the designed reinforcement and spray accordingly with non-accelerated shotcrete. This process may be a two-pass process, but the structural integrity of the element will not be compromised. The final shotcrete layer must also be non-accelerated to allow time to create the desired finish.

To help specify these finishes and colours it is recommended that examples of previous projects, including pictures, be presented and referred for clarification to tenderers who have demonstrated project experience in this area. Pre-specification and pre-construction trials are imperative in the process to convince the specifier they will obtain the required shotcrete finish if anything other than a gun finish is required.

These trials should also be used to:

1. Confirm design performance.
2. Confirm compaction.
3. Confirm contractor’s and their artisans’ competence.

Fibre reinforcement is not recommended when a non-gun finish is required. Fibres interfere with screeding, floating, and trowelling and make most finishes much more difficult to achieve. Steel fibres should not be used when any specific aesthetic finish is

required because corrosion of steel fibres located close to the surface will cause pop-outs, rust stains, and streaking.

When a tight-tolerance geometric profile is required, a mortar-based smoothing layer may be required following by careful screeding and steel trowelling. This type of effect is often specified for water channels.

When a water-proofing membrane is required in, for example, a tunnel lining, the surface will usually be sprayed with a smoothing layer consisting of mortar that will provide a much smoother surface than a standard structural shotcrete mix containing coarse aggregate greater than 4.75 mm. This type of mortar can be applied using manual dry-spray shotcrete, or wet-sprayed using conventional robotic or hand sprayed machinery with a reduced rate of pumping and reduced air pressure. This will typically produce a lightly dimpled surface resembling orange skin effect and is often necessary to cover protruding fibre reinforcement that may pierce the membrane. This is particularly useful when sprayed membranes are specified. Over-use of sprayed waterproof membranes to fill in the natural dimples that occurs in normal gun finish linings is expensive therefore levelling or smoothing the lining offers significant cost savings.

8.4 CRACKING

Cracking is one of the most undesirable outcomes that can degrade the aesthetics of a shotcrete surface. Cracks are almost always associated with plastic or drying shrinkage and can take the form either of closely spaced “crazing” cracks, or more widely spaced contraction cracks. The spacing of the cracks will reflect the degree of restraint provided to the concrete as it shrinks. Cracks not only look unsightly but can compromise the durability of a shotcrete structure. It is therefore critical to limit cracking. Cracks are mainly caused by mix design problems, lack of care in preparation, difficulties during or poor application, or adverse environmental conditions. The factors that tend to promote surface cracking of shotcrete are described below.

Any factor that reduces slump retention can increase the difficulty of achieving a good surface finish. This is because it reduces the time available to create the desired surface finish. Rapid slump loss makes it difficult to work the surface resulting in tearing that can promote cracking. Use of a low water/binder ratio tends to encourage plastic shrinkage cracking because it both reduces slump retention and reduces the amount of water available within the shotcrete to replace water lost to evaporation at the surface. Adverse weather, especially windy and dry conditions, will aggravate the rate of moisture loss and increase the tendency for cracking. A fresh shotcrete surface should always be protected from direct sun, especially in warm-hot and/or windy weather, by applying either an evaporation retardant (aliphatic alcohol), a curing compound, or a covering (where practical) based on wet hessian or plastic sheeting. Wind barriers can also be recommended. The most practical method used in tunnels is the use of water misters to keep the humidity up and assist in better curing.

A high cementitious content will lead to increased total drying shrinkage strain with the passage of time. This will tend to increase the likelihood of drying shrinkage cracking at later ages. A high water/binder ratio will also increase the inherent shrinkage of the shotcrete and exacerbate the potential for crack formation in short and longer term. Drying shrinkage is typically measured out to 56 or 90 days, but continues

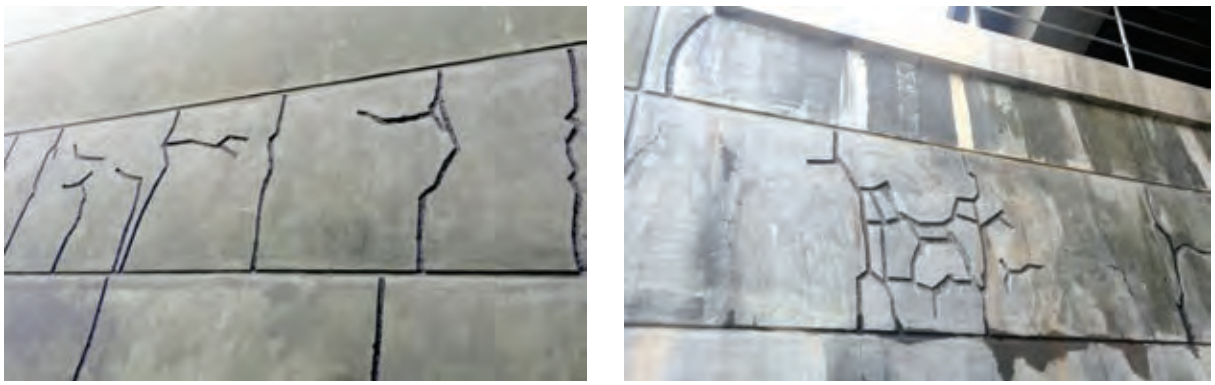

Figure 8.13: *Repair of shotcrete that suffered cracking due to mix design issues*



Figure 8.14: *Crack control through jointing in a sprayed concrete spillway*

to shrink well beyond these ages. However, plastic shrinkage cracks generally appear once initial set occurs and sometimes, in extreme weather conditions, immediately. If this occurs one should act swiftly to assess and control the cause, or stop spraying.

For dental or overlain shotcrete, micro synthetic fibre may assist with resisting internal stresses and cracking potential. These may also assist with resisting sloughing/sagging in slope applications.

When a shotcrete layer is well bonded to the substrate, the cracks will tend to be well distributed resulting in more numerous narrow cracks. Shotcrete that is poorly bonded to the substrate (such as to sandy ground) will tend to exhibit more widely spaced cracks of greater width. Internal restraint can be provided by reinforcing bars. Inclusion of bars will tend to promote more numerous narrow cracks rather than widely spaced cracks of greater width.

8.5 DURABILITY

Aesthetic shotcrete, such as simulated or Mock Rock finishes, when applied over a base layer of structural shotcrete, can be considered equivalent to a sacrificial layer in the context of durability. The cover requirements to reinforcing bars must be satisfied by the underlying structural concrete, hence the overlying aesthetic shotcrete can be taken to protect the material underneath. There is therefore some justification for taking the exposure conditions to be relatively benign for the underlying structural concrete compared to that imposed on the surface layer.

When applying textured surface finishes to structural shotcrete elements containing steel reinforcement, the minimum cover to reinforcement must account for the deepest grooves and indents in the surface. This is particularly relevant to walls finished to resemble pre-cast panels as these often include recesses into the surface for jointing and pattern requirements.

When including colouring agents in aesthetic shotcrete, it is recommended that the supplier of colouring agents demonstrate that the appropriate degree of colour resilience and durability of the concrete matrix is retained when these materials are added to concrete. Some colouring agents are known to increase drying shrinkage when mixed into concrete.

9

Shotcrete Equipment

9.1 INTRODUCTION

The selection of shotcrete equipment depends on numerous factors. They include:

- Specification of the project.
- Type of application.
- The proposed placement rate of the shotcrete.
- Times available for shotcreting.
- Type of shotcrete process (wet or dry).
- Access to the site or sites and physical size of the work face to determine feasibility of various shotcrete equipment configurations.
- Availability and quality of local materials.
- The proposed shotcrete delivery system including conveying distance.

A basic complement of equipment for wet shotcreting usually consists of a shotcrete pump, compressor, nozzle and delivery hose. For dry shotcreting the basic complement of equipment includes a pressurised chamber, compressor, nozzle, and delivery hose. Over recent years the technology in shotcrete equipment has advanced to a level that now includes remote-controlled spraying, integrated accelerator dosing pumps, on-board compressors, hydro-scaling facilities, etc.

The selected configuration of equipment should be capable of discharging the mixture into the delivery hose under close quality control, and deliver to the nozzle a continuous, smooth stream of uniformly mixed material at the proper velocity.

As a guide, hand-held wet shotcrete-placing rate is between 3 and 10 m^3/hr. The range of shotcrete outputs from various dry-mix machines is between 1 and 5 m^3/hr. The range of shotcrete outputs for various robotic wet-mix machines is between 3 and 25 m^3/hr. Because of the large variety of machines available shotcrete applicators should always refer to the manufacturer's operating specifications.

9.2 DRY-MIX EQUIPMENT

9.2.1 General

Dry-mix shotcrete equipment can be divided into two distinct types, either single- or double-chamber machines, or continuous-feed machines, usually called rotary machines.

9.2.2 Single- and Double-Chamber Machines

Single-chamber machines provide intermittent operation by placing material into the chamber and closing, then air-pressurising the chamber, causing the material to feed into a delivery hose or pipe. When the chamber is empty, it is de-pressurised and refilled, and the operation repeated (Figures 9.1 and 9.2).

Double-chamber machines allow for a more continuous operation by using the upper chamber as an airlock during the material feeding cycle.

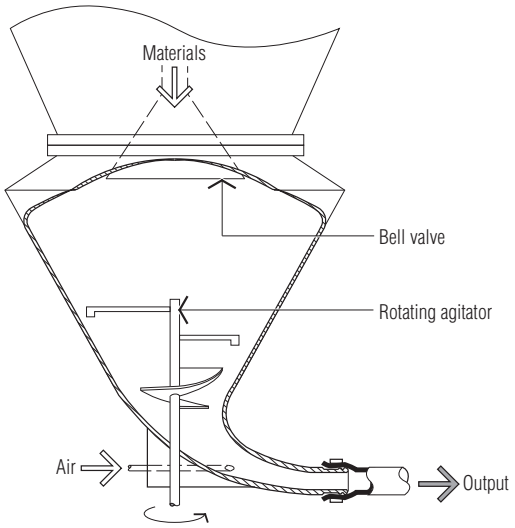

Figure 9.1: *Detail of single-chamber machine*

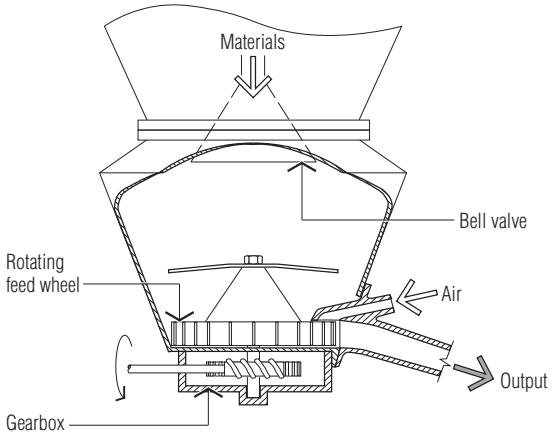

Figure 9.2: *Detail of single-chamber machine with feed wheel*

9.2.3 **Rotary Machines**

There are generally two types of rotary machine available.

Rotary-barrel machine (Figures 9.3 and 9.4) utilises sealing pads on the top and bottom of the rotating element. Material is gravity fed from the hopper into the cavities of the rotor in one area of its rotational plane and discharged downward from these cavities with air pressure at the opposite point in its rotation. Additional air is introduced into the outlet neck to provide proper volume and pressure for material delivery down the hose.

Rotary-feed-bowl machine (Figures 9.5 and 9.6) utilises one sealing segment on the top surface of the rotating element. Material is gravity fed from the top hopper into U-cavities in the rotor and discharged into the outlet neck when that particular cavity is aligned under the sealing segment, air being injected down one leg of the U and carrying the material into the material hose.

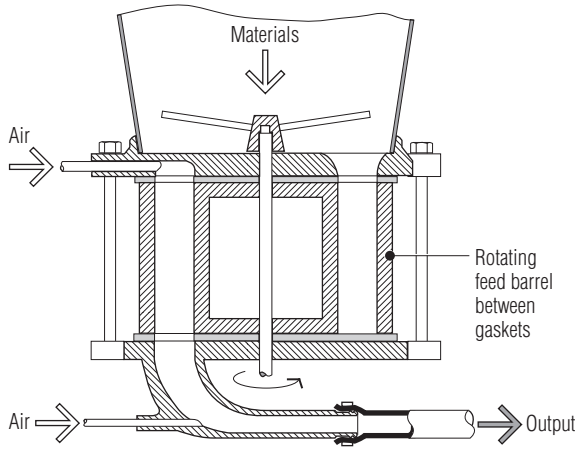

Figure 9.3: *Detail of rotary-barrel machine*



Figure 9.4: *Typical rotary-barrel machine*

Some rotary machines have been modified to handle both wet-mix and dry-mix spraying. No conversion is needed nor are additional accessories necessary, but generally much higher consumption of air is required to operate these machines.

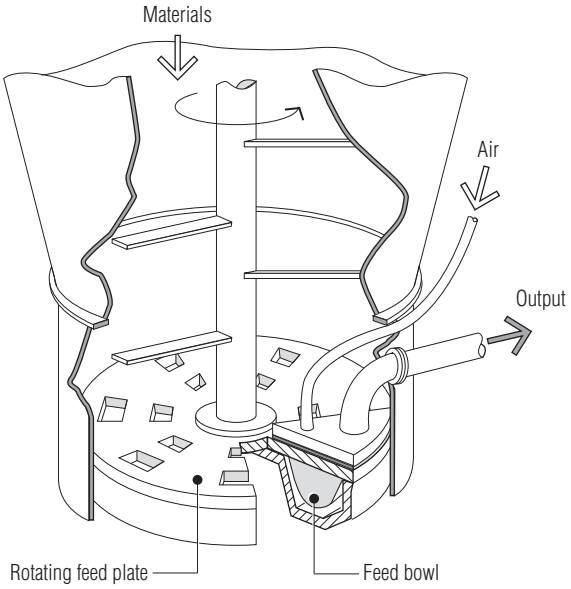

Figure 9.5: *Detail of rotary-feed-bowl machine*



Figure 9.6: *Typical rotary-feed-bowl machine*

9.3 **WET-MIX SHOTCRETE PUMPS**

Wet-mix shotcrete equipment can be generally described as positive-displacement equipment.

Positive-displacement machines are either equipped with mechanical or hydraulic-powered pistons with a variety of cycling valves and surge-reducing devices (Figure 9.7), or peristaltic-type squeeze pumps using mechanical rollers to squeeze

the shotcrete through a tube into a delivery hose (Figure 9.8). Also, worm pumps (rotor/stator pumps) are used where off-set blades force the mix through a tube. This type of pump is primarily used for application of render or plaster mixes incorporating fine aggregates generally 4 mm minus, but can handle up to 8 mm with the appropriate pump configuration (Figure 9.9). All the above positive-displacement machines have compressed air introduced at the nozzle to pneumatically apply the shotcrete mix.

9.4 ANCILLARY EQUIPMENT

9.4.1 Robotic Equipment

Remote-controlled robotic shotcreting equipment is used to improve the safety and productivity of the operators by:

- Keeping the operator away from unsupported ground.
- Minimising exposure to rebound and dust.
- Allowing access to difficult areas.
- Being less physically demanding than hand-held spraying.
- Increasing productivity through higher volumetric output.

The equipment typically consists of a multi directional telescopic boom, oscillating nozzle, and shotcrete pump mounted onto a vehicle for mobility, while the sprayer controls nozzle movements and pump with remote hand controls (Figures 9.10 and 9.11). Tunnel equipment often utilise a parallel lance on the boom for ease of spraying tunnel profiles.

The type and capacity of proposed shotcrete equipment should ideally be backed up with

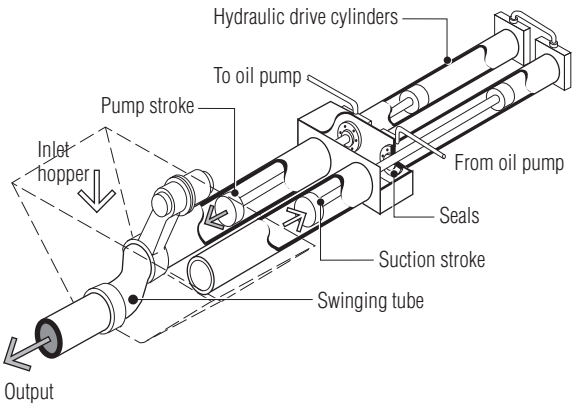

Figure 9.7: *Detail of positive-displacement piston-type wet-mix equipment*

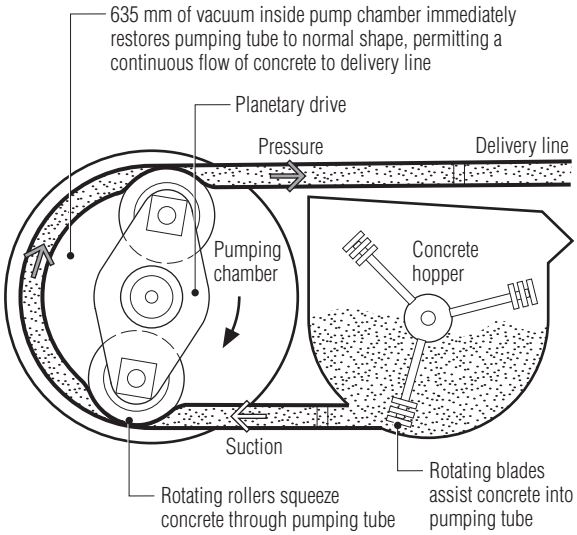

Figure 9.8: *Detail of peristaltic-type (squeeze pump) wet-mix equipment*

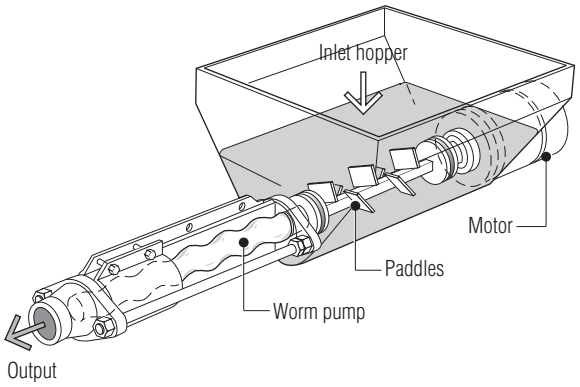

Figure 9.9: *Detail of worm (mono) pump wet-mix equipment*

performance records of successful application. Robotic shotcrete units should be capable of mixing and feeding materials at a regular rate and ejecting shotcrete from the nozzle in a continuous uninterrupted stream. The velocity should be sufficient to allow adherence of the materials to the surface being shotcreted with a minimum of rebound and maximum adhesion and density. Both air and water pressure should be steady and free of pulsations.

9.4.2 Accelerator Dosing Pumps

Various pumps can be used when dosing accelerators. The main types of pump are important because of a need for consistent and accurate dose rates. Typically, the two types of pumps used to achieve this, are mono or peristaltic (hose) pumps. The capacity of the dosing pump is also important, as a rate of up to 8% of the binder content by weight per cubic metre of

shotcrete may be required. The dosing pump therefore needs to be matched to the pump output and the min / max dose rate depending on the binder content. Dosing the shotcrete above 8% by weight of binder can be detrimental to the shotcrete quality. The dosing unit should be incorporated into the shotcrete machines control system.

Accurate dosing is very important and it is desirable for modern shotcrete rigs to have integrated computerised systems that control and monitor the accelerator dose rates.

9.4.3 **Nozzle Assembly**

The nozzle design is important as it affects the compaction of the sprayed concrete, the rebound during spraying, and the consistency of the mix when dry spraying. In the wet process the mixing of accelerator takes place in the shotcrete nozzle (Figures 9.12, 9.13 and 9.14(b)). In the dry process, the water ring and assembly within the nozzle is critical to ensure thorough wetting of the mix (Figure 9.15).



Figure 9.10: *Remote-controlled shotcreting rig for mining applications*

9.4.4 **Shotcrete Delivery Hoses**

Shotcrete delivery hoses are available in several different materials and diameters and should be matched to the shotcrete process. Consideration should be given to the constituent material properties, length of delivery line, working pressures and spraying rates required. The internal hose diameter should be a minimum 4 times the size of the largest aggregate particle size in the mix. When shotcreting with steel fibres in the mix, the fibre length should preferably be no more than 70% of the internal diameter of the hose. For synthetic fibres, this requirement can be relaxed. As an example, in mining applications, 65 mm-long synthetic fibres are commonly used with 50 mm internal diameter delivery hoses.

The pressure rating of the hose should always be checked and always be in accordance with the pump manufacturers recommendations. All connections and couplings or clamps are to be fitted correctly and have proper safety restraints for blow-out protection.

9.4.5 **Equipment Safety**

All shotcrete equipment and hoses must be treated with the highest of respect. More detailed safety information is dealt with in shotcrete application Section 9.0 but brief safety checks are:

1. All plant is systematically checked – pre-start checks including emergency stops.
2. All hoses and clamps are in good condition, secure and have correct safety whip checks.
3. All hoses are correctly rated.
4. Service connections to air, water and power are safe and secure.
5. Trailing cables are identified and elevated or kept in a safe position.



Figure 9.11: *Remote-controlled shotcreting rig for tunnel and infrastructure applications*



Figure 9.12: *Typical remote-controlled wet-mix nozzle assembly*

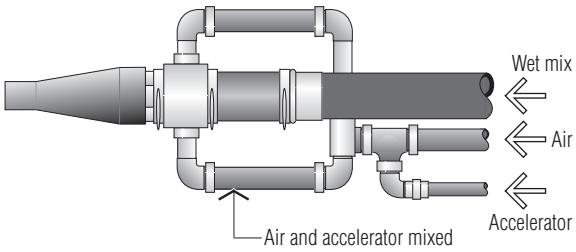

Figure 9.13: *Detail of typical wet-mix nozzle for remote-controlled applications*



(a) SHORT-NOZZLE TYPE

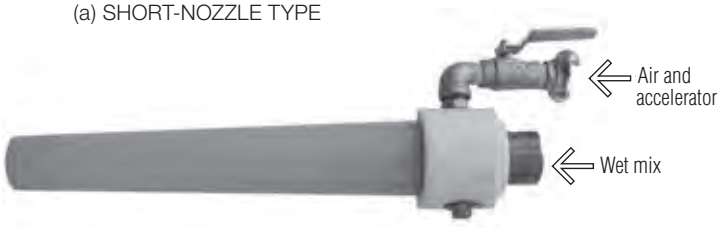

(b) LONG-NOZZLE TYPE

Figure 9.14: *Typical hand-held wet-mix nozzles*

9.4.6 **Thickness Control**

There are numerous methods used to monitor shotcrete thickness. including pins, flags, drill cores, etc. However, more scientific and useful monitoring of shotcrete thickness can now incorporate laser scanning of the u/g roadway. The ground surface and shotcrete surface is measured pre- and post-spraying: the two surveys can then be compared and a “thickness map” generated. Using a 3D laser scanning system, the sprayer performs a scan before shotcrete is applied and another scan after the shotcrete is installed. The data acquired are processed on the spot and the calculated thickness of shotcrete made available to the sprayer at the job site. This can help to identify regions of inadequate thickness, and is an excellent form of QA for lining thickness.

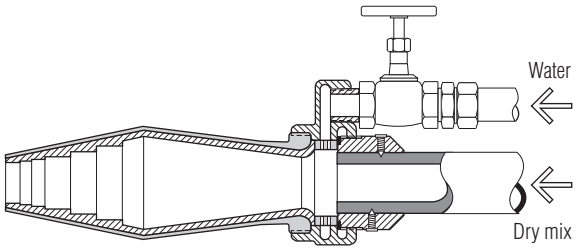

(a) SHORT-NOZZLE TYPE

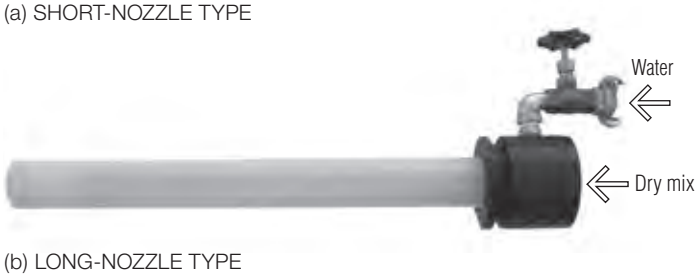

(b) LONG-NOZZLE TYPE

Figure 9.15: *Typical hand-held dry-mix nozzles*

10

Batching and Mixing

10.1 BATCHING OF WET-MIX SHOTCRETE

Batching is the process of weighing or measuring out by volume the ingredients as specified. *Mixing* is the process of combining the ingredients so that they are uniformly distributed. *Agitating* is maintaining the mix in a usable condition until required.

Shotcrete and mortar should be batched and mixed in accordance with the requirements of AS 1379. The ability of the mixer to mix uniformly should have been established by testing for uniformity of mixing as specified in AS 1379. The production of shotcrete or concrete in Australia is generally done by what is commonly called the dry-batching or the mobile-mixing method. Alternative methods such as central and staged-mixing are used, although not as widely as the mobile-mixing method. The Australian Standard for mixing guidelines shall be adhered to for each mixing method.

Although no one method in batching concrete is generally better than the other if the concrete is mixed in accordance with the Australian Standards and equipment manufacturers instructions, each method may provide the user with a more efficient method of concrete production depending on their specific circumstances and requirements.

Wet mixing

Wet mixing is carried out from a permanently mounted mixer located adjacent, or is part of the suppliers batching equipment. The ingredients are completely mixed before discharge into the appropriate handling equipment.

Mobile mixing (dry batch mixing)

Mobile mixing is a truck-mounted mixer that is charged with all the ingredients, at a centralised batch plant. This method is the most widely adopted system for concrete or shotcrete production in Australia.

10.2 BATCHING OF DRY-MIX SHOTCRETE

Most dry ingredients are usually premixed at a factory, packed in bags, or batched at a concrete plant. The moisture content of the mix batched at a concrete plant (prior to the majority of water being added at the nozzle) should be between 2 and 5% this is due to remaining moisture left after manufacture. More than 5% moisture content can cause blockages in the line.

10.3 MIX CONSISTENCY

10.3.1 General

The concrete or mortar required for shotcreting depends on the type of conveyance equipment, distance of delivery and the application procedure. For a given cement content and w/c ratio the consistency or flow can be adjusted by chemical admixtures added at the mixing plant or on site.

10.3.2 Fibres and Admixtures

The manufacturer or distributor should be consulted for the recommended methods of addition, which can vary between types of fibres. At large civil sites automated dosing of fibres is sometimes used. However, the most common method of fibre addition is by manual loading into the concrete truck.

Typically, admixtures are dosed with liquid dispensing equipment, this equipment requires regular calibrating and the equipment should measure the volume or weight of liquid to an accuracy of +/- 5%.

10.3.3 Temperature at Batching

Shotcrete or mortar should not generally be batched if the temperature of the materials is below 5 °C or more than 35 °C, unless adequate precautions are undertaken. Some of these measures include the use of chilled mixing water, additional stabiliser, and keeping aggregates Saturated Surface Dry via sprays.

11 Delivery

11.1 GENERAL

Delivery involves getting the shotcrete to the equipment in adequate quantities when required and is a major consideration, particularly in underground construction. There are many ways to get the shotcrete to site including truck-mounted shotcrete agitator, slick-line or drop pipe, and dry-bulk bags in the case of dry shotcreting. The choice of delivery method for the shotcrete material depends mainly on the shotcrete process (wet or dry), access, material handling system, location of working places, and demand of shotcrete per shift.

Transportation of the mixed shotcrete from the mixing plant to the point of placement must be carried out in a vehicle that will prevent segregation or loss of material.

11.2 TRUCK-MOUNTED AGITATOR

When delivering shotcrete in a truck-mounted agitator it is necessary that the vehicle provides adequate agitation. Equipment or plant that is identified as shotcrete agitating plant can be used for mixing concrete, however the mixer should be thoroughly cleaned out when making different mixes to avoid cross-contamination.

11.3 SLICK LINE OR DROP PIPE

When transporting shotcrete down an inclined or vertical slick line, certain aspects need to be considered. Generally, the slick-line diameter should be between 150–300 mm depending on the vertical drop and mix consistency. Since shotcrete is an abrasive material, consideration of wear rates due to free fall velocities and associated friction should be made.

Before a slick line is used, it should be lubricated with a cement and or suitable slurry mix. Also, some form of energy dissipator is required at the end of the line to control the exit of the concrete from the line. This is generally achieved using a “kettle” of some suitable design. The kettle may also, if designed in such a way, perform the function of a re-mixer in case any minor segregation has occurred.

The mix design should be adjusted for problems, such as those listed below, when using slick lines:

- Loss of cementitious materials.
- Loss of fine materials.
- Segregation of the mix.
- Loss of slump.
- Increased wear and tear from fibre reinforced shotcrete.

11.4 PUMPING

Shotcrete pumps are used to convey shotcrete through a pipeline, or hose, to the nozzle. The pump should be in good operating condition and well maintained. Particular care should be taken when washing out the pump and lines at the end of each shift.

Information on pumps and related matters can be accessed from the following sources:

- American Concrete Institute web site at:
  www.aci-int.org
- American Shotcrete Association web site at:
  www.shotcrete.org
- International Centre for Geotechnics and Underground Construction web site at:
  www.icguc.com
- Concrete Pumping Association of Australia web site at:
  www.cpassoc.com.au

12 Application

12.1 GENERAL

The application of shotcrete can be divided into two primary methods, hand spraying and mechanised spraying. Hand spraying is generally used for applications in civil construction and concrete repair. Mechanised spraying is used in underground mining and tunnelling applications and is ideally suited to overhead application. Mechanised spraying can, in instances where access and height are within their capacity, be used also for the stabilisation of slopes in open pit mines. There are other more specialised methods of mechanised application available such as remote shaft lining and the use of shotcrete spray equipment mounted onto tunnel boring machines. The use of elevated work platforms needs to be carefully assessed with regards to SWL and suitability.

The use of experienced and competent operators who have been adequately trained in the application of shotcrete is essential to ensure the quality of any shotcrete application. It is essential to carefully consider the equipment type, condition, and performance requirements before the commencement of spraying. Well-trained, competent & experienced site supervision is paramount.

12.2 SERVICES

12.2.1 Power

A reliable and earthed electrical power supply at the correct voltage should be provided to electrically-powered machines in accordance with the relevant Australian and site standards. Care should be taken to ensure adequate protection of all electrical cables and trailing cables.

12.2.2 Water

Water quality and temperature will affect the shotcrete performance. The water should be of potable quality and of suitable temperature, typically 18–25 °C for shotcreting applications. In mining, water temperatures can exceed 40 degrees, and if the water cannot be chilled then the use of sufficient stabiliser could be required. Water quality should comply with AS 1379. It is also important to have an adequate supply of water with sufficient pressure and availability for the particular application, curing (when carried out), and cleaning.

12.2.3 Lighting

Lighting is important to improve safety and helps the crew to spray a quality product with the correct thickness and minimum rebound. The intensity and positioning of the lighting are also important to reduce shadows and assist the operator's view of the workplace. Additional lighting in large tunnels is essential for good visibility by the operator.

12.2.4 Ventilation

All enclosed areas need to be well ventilated due to the dust, fumes and other airborne contaminants created during the process of shotcrete application from the equipment and shotcrete. In underground mining applications, quality ventilation is essential to dilute and remove machinery fumes, dust and chemicals from the area being sprayed.

12.2.5 Compressed Air

An adequate and consistent supply of clean, dry compressed air is needed with adequate pressure and volume. The supply depends on the particular equipment specification, the condition of the equipment, on-site operating conditions, hose length and diameter.

As a guide, typical air requirements are:

- For wet shotcreting, the air consumption is about 12 m^3/min (425 cfm) at a pressure of about 7 bar.
- For dry shotcreting, the air consumption is about 15 m^3/min (530 cfm) at a pressure of around 7 bar.

In both applications, the designer's specifications need to be adopted if applicable.

12.3 TRAINING AND CERTIFICATION

Training and Certification is key to ensuring that shotcrete is applied correctly with minimum wastage in a timely manner. To ensure success in the workplace, spraying should be undertaken by either a competent sprayer or, if the sprayer is undergoing training, then the trainee sprayer must be closely supervised by a competent sprayer.

A competent sprayer is a person who not only is able to apply shotcrete using the necessary spraying techniques but also has a sound understanding of the operation, cleaning, and maintenance of their equipment, a general understanding of basic concrete technology, the quality control requirements, and requirements of the project, and has a high regard for safety.

Most companies that provide shotcrete services have developed their own in-house training and certification processes but often these certifications are only recognised by the company involved.

There is, however, internationally recognised certification for both hand spraying and robotically applied shotcrete. It should be noted that both certification streams are purely for certification, while they both do include some classroom training, they both expect the person applying to be certified to be able to demonstrate that they have in excess of 500 hours of on-the-job spraying for hand spraying certification or 3 years' experience for robotically applied shotcrete certification.

The ACI has a certfication program for hand spraying, which in Australia is arranged and organised on a regular basis by the Concrete Pumping Association of Australia who can be contacted on 1300 136 636 or info@cpassoc.com.au. It is run over 2 days with day 1 being dedicated to a 7-hour shotcrete nozzleman educational course covering subjects such as:

- Concrete Materials
- Mixture Proportioning
- What is Shotcrete
- Shotcrete Materials
- Shotcrete Equipment
- Preparation for Shooting
- Shotcrete Placement Principles and Techniques
- Communication
- Environmental Conditions & Precautions
- Finishing & Tolerance Controls
- Safety.

Full certification includes written components and performance exams. The performance exams require shooting test panels on the second day which are then cored and the quality of the shotcrete placement is graded there are 2 certifications available being wet mix vertical and wet mix overhead

EFNARC oversees the certification of sprayers for robotically applied shotcrete. These certifications are held on an ad-hoc manner where the experienced sprayer contacts an EFNARC examiner and requests certification. Again the certification is normally done over a 2 day period but will take place in the sprayers workplace, the first day is attending educational lectures very similar to the ACI subjects and also followed by a written exam and on day 2 the sprayer does a practical exam, EFNARC has also instituted a nozzleman in training certification where the use of 3D simulators is used for virtual training of sprayers for nozzle operators. Complete details of both these certifications as well as a list and contact details of examiners can be found on the EFNARC website: http://www.efnarc.org

12.4 SAFETY

12.4.1 General

Shotcreting involves spraying of dense particles at high velocity onto a hard surface. This process results in rebound of material at high velocity and the generation of substantial amounts of dust. It can also involve operating near areas of unstable ground. To minimise the exposure risks for shotcrete operators, spraying should ideally be undertaken using remote controlled spraying equipment. This will help reduce exposure to unstable ground and rebound, but not necessarily dust. However, robotic spraying is not practicable or economic in many situations, so special measures must be taken to protect workers involved in hand-spraying. The generation of dust can be subject to substantial variations and depends on the application method (dry mix versus wet mix), the shotcrete mix design, and the spatial confinement within the specific application environment.

Mitigation measures for dust control which should be considered are:

- Dry mix – use pre-wetted aggregates, adequate nozzle type, nozzle distance and water cement ratio.
- Wet mix – use right dosage of alkali free accelerators.
- Use robotic spraying equipment.
- Provide adequate ventilation.

Remote controlled shotcreting permits the control of the application from a relative position of safety. Wet mix shotcrete produces less dust and rebound compared to the dry mix process.

In normal circumstances, a project specific

risk assessment will be required to determine the appropriate equipment and PPE to be used. During overhead applications in tunnels it is not permitted to stand under the freshly applied shotcrete layer before it has achieved the required minimum compressive strength as specified by the design. The time required to achieve the required strength should be established from shotcrete strength gain trials. If man access is required prior to achieving the required minimum strength, secondary overhead protection in the form of protective shields or similar must be provided to protect the work force from potential shotcrete fall outs.

It is necessary that statutory and site-specific Occupational Health and Safety regulations are adhered to without exception. In particular the following should be undertaken and reviewed as a minimum:

- Competency & training of operators and personnel.
- Statutory & industry inductions.
- Site inductions.
- Full safety plan must be in place to include at least:
  - Risk assessments
  - Job safety & environmental analysis
  - Safe work method statements
  - House keeping
  - Equipment prestart checks & maintenance
  - Toolbox talks
  - Unsupported ground work procedures
  - Product SDS requirements
  - Moving equipment
  - Explosives
  - Work place inspections.

12.4.2 Minimum Recommended Protective Equipment

All personnel must wear an approved safety helmet for head protection, approved footwear and high visibility vest (Figure 12.1). The sprayer and others near the shotcreting operation also require protection from rebound, cement dust and slurry, and Respirable Crystalline Silica (RCA) using PPE such as approved dust masks, respirators, eye and ear protection. Due to the irritating nature of wet cement and various chemicals used in shotcrete, skin protection such as a barrier cream can be used. Appropriate protective clothing for the sprayer (long sleeves and pants) should always be worn. The minimum additional PPE

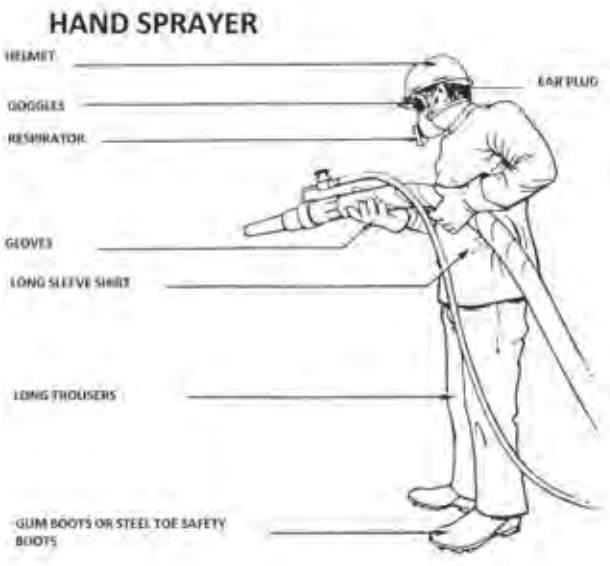

Figure 12.1: *Personal protective clothing and equipment appropriate for a hand-spray nozzleman*



Figure 12.2: *Operator wearing an "air stream" helmet*

requirements for an underground sprayer is goggles and respirator or the use of a full-face helmet or "airstream" type positive displacement helmet which filters air using a small motor that runs from a standard underground cap-lamp battery pack (see Figure 12.2). The stream of filtered air is directed at the visor preventing it from fogging and keeping the operator

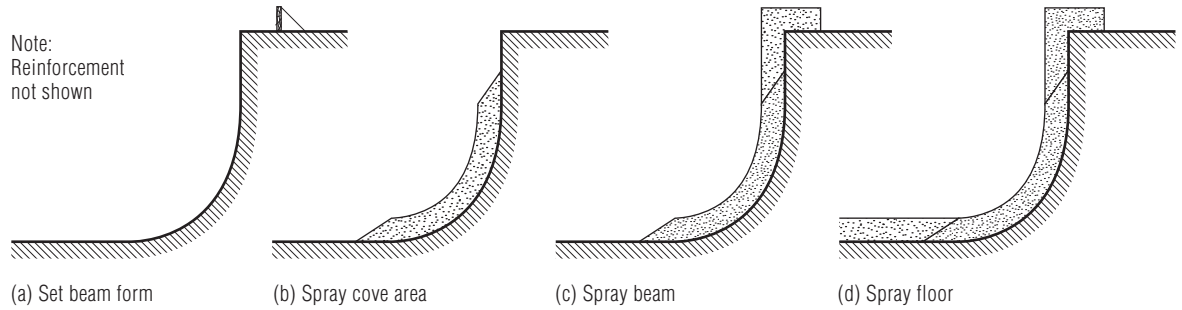

Figure 12.3: *Careful sequencing when spraying free-form shotcrete on earth surfaces, such as inground swimming pools, can prevent slippage*

cool. A list of the appropriate PPE to use in relation to shotcreting is included below:

- ***AS 1269.3:2005*** – Occupational Noise Management – Hearing Protector Program.
- ***AS 1336:1997*** – Recommended Practices for Occupation Eye Protection.
- ***AS 1337.1:2010*** – Personal Eye Protection – Eye and Face Protectors for Occupational Applications.
- ***AS 1338 (Parts I to III)*** – 1992, Filters for Eye Protectors.
- ***AS 1715:2009:*** Selection, Use and Maintenance of Respiratory Protective Equipment.
- ***AS 1716:2003*** – Respiratory Protective Devices.
- ***AS 1800:1998*** – Occupational Protective Helmets – Selection, Care and Use.
- ***AS 2161.1:2000*** – Occupational Protective Gloves – Selection, Use and Maintenance.
- ***AS 2210.1:2010*** – Safety, Protective and Occupational Footwear – Guide to Selection, Care and Use.
- ***AS 2210.3, Part 3*** – Specification for Safety Footwear.
- ***AS 4501.1:2008*** – Occupational Protective Clothing Part 1 – Guidelines on the selection, use, care and maintenance of protective clothing.

12.5 SPRAYING

12.5.1 Substrate and Surface Preparation

12.5.1.1 *General*

The surface preparation required depends on the condition and nature of the substrate against which shotcrete is to be placed. In all cases, where flows of water could interfere with the application of shotcrete or cause leaching of cement, the water should be sealed off or diverted by pipes, gutters, strip drains or sheets to points where they may be plugged off after spraying. In underground construction, pre-injection of various strata using cementitious or chemical grouts is often used to prevent water ingress.

Most importantly, all substrates or surfaces should be clean, free of dust, oil, excessive water and other contaminants which might interfere with bonding of the shotcrete. Pre-damping of most surfaces other than steel and impervious formwork is essential to minimise loss of moisture in shotcrete.

In tunnelling applications, all surfaces to be sprayed should be prepared prior to shotcreting in accordance with the recommendations set out in this section of the guide. Adequate surface preparation is particularly important to achieve optimal adhesion between the shotcrete and the substrate.

Seepage water entering the tunnel should be controlled and prevented from adversely affecting sprayed concrete placement. Water inflows which might cause deterioration of the sprayed concrete or adversely affect sprayed concrete adherence should be diverted by channels, strip drains, weep holes, chases, pipes, drainage mats or other appropriate means away from the area receiving shotcrete.

In some instances, grouting may be required

to reduce/stem inflows to acceptable limits, such that ingress water can be diverted away from the application area using one or more of the measures discussed.

The following provides particular recommendations for different surfaces.

12.5.1.2 *Earth Surfaces*

The range of shotcrete applications covering earth surfaces are broad and include swimming pools, slope stabilisation and protection, tunnels, canal linings, open channels, reservoirs etc. Proper preparation and compaction of the earth are essential to prevent erosion during application. The earth surface is then trimmed to line and grade to provide adequate support and to ensure the design thickness of the shotcrete. A moisture barrier may be installed which will prevent movement of moisture from the newly-placed shotcrete into the earth. If no barrier is used, the earth surface should be pre-wetted to prevent moisture loss from the freshly sprayed shotcrete. Extra care in the sequence of application (Figure 12.3) or a flash coat is recommended to prevent shotcrete slippage.

12.5.1.3 *Rock Surfaces*

The substrate should be free from loose materials, dust and films (such as oils). This can generally be achieved by using a combination of water and compressed-air jet. Wet sandblasting can also be considered. In underground tunnels and mines, "scaling" is often carried out by mechanical hydraulic-pick hammer, or high-pressure hydro scaling to remove loose rocks and scats. Cleaning should start from the top working downwards. If the rock surface has dried up post initial scaling and washing down, it should be pre-wetted prior to the application of shotcrete.

12.5.1.4 *Formwork*

Non-rigid formwork is used where the appearance of the back of the shotcrete is of no importance. Examples include Hessian, or fine-gauge expanded metal attached to light framework. It should be firmly fixed and held taut to minimise vibration or flapping so that sagging is avoided and good compaction of the shotcrete can occur.

Rigid formwork. Timber or steel formwork where used should be coated with a purpose-designed release agent to prevent absorption of moisture and adhesion of the shotcrete. Additionally, it should be adequately supported and strengthened to prevent excessive vibration and deflection.

A polythene membrane stretched over the form can also provide a separating surface. Plywood is generally sufficient for rigid formwork. Smooth-faced materials need only be employed when the face is to be accurately positioned and a "fair-faced" surface provided. If forms are to be removed after use, a form-release agent should be applied to the form to prevent absorption of moisture and to inhibit the bond between shotcrete and the form.

12.5.1.5 *Concrete Surfaces*

All loose, cracked or deteriorated surfaces should be removed and taken back to sound concrete. Water blasting, chipping, scabbling, light hydro demolition or other mechanical means should be used to remove any contaminated concrete, from chemicals, oils or corrosion products. Where reinforcement is exposed, it should be free from loose rust, scale or other deleterious matter likely to affect durability and bonding. If required a chemical bonding agent or slurry coat can be applied to the surface. Where shotcrete is to be placed against a smooth concrete surface, it should be roughened or abraded using either of the aforementioned mechanical methods. After the above preparation is carried out, the concrete surface should be pre-wetted prior to the application of shotcrete.

12.5.1.6 *Shotcrete Surfaces*

In order to achieve a monolithic lining, the bond between applied layers must be frictionally tight and form fitting. Shear reinforcement between two layers should be avoided (except for lattice girders and steel sets in tunnels) since shear reinforcements substantially increases the shadowing and poor compaction risk of the final product. The shear and tensile bond between subsequent layers can be achieved with the surface roughness of the initial layer to provide an effective interlocking surface.

To achieve optimum bond between subsequent shotcrete layers the application surface of an existing layer should be prepared by:

- Removal of any damaged or disintegrated sections.
- Cleaning by high pressure air and water jetting to remove any dust.

- Removal of grease, oil and diesel soot using a detergent.
- Surfaces should be damp, not saturated before the installation of subsequent layers.

Bond is improved by applying successive layers as soon as possible (that is, as soon as strength development is sufficient to support the combined self-weight of multiple layers) after the initial layers have been placed. Bond can also be enhanced by a shotcrete mix that promotes the reduction of drying and early thermal shrinkage, by lowering the heat of hydration and by facilitating an adequate curing process.

12.5.1.7 *Steel Surfaces*

Before shotcrete is applied over steel surfaces, grit blasting or other appropriate methods should remove all traces of loose mill scale, rust, oil, paint, or other contaminants.

12.5.1.8 *Masonry Surfaces*

Require preparation similar to that of concrete surfaces. Moisture absorption of the masonry is normally high and pre-wetting usually considered essential.

12.5.1.9 *Frozen Surfaces*

Should generally not be shotcreted, particularly where bond and rapid setting characteristics are required.

12.5.2 Environmental Conditions

12.5.2.1 *Temperature at Point of Application*

Shotcrete or mortar should not be applied if the temperature at the time of application is less than 5 °C or more than 35 °C, unless adequate precautions are undertaken. When necessary to do so it is essential to seek advice from a qualified concrete technologist to achieve the desired results.

12.5.2.2 *Windy and Draughty Conditions*

It can be difficult to spray shotcrete in windy conditions. If there is a likelihood of extreme conditions, provision should be made to screen the nozzle, the jet and the surface to be treated to prevent the mix from being blown out of the jet. In the open, a light metal cone fitted over the nozzle tip at its apex can sometimes suffice. Particular consideration should be given to stray paste or mist particles that can easily travel with wind settling on surrounding surfaces, or in high wind situations, some distance away.

Winds and draughts also promote cracking by rapidly drying the fresh concrete. Screening of the applied surface should be provided where possible and evaporation retardant considered. Curing procedures should be applied as soon as possible.

12.5.2.3 *Rainy Conditions*

Unless adequate protection is provided, shotcrete should not be placed during rain or when rain appears imminent. On exposed sites fresh shotcrete must be protected against rain. Heavy rain falling on freshly-placed shotcrete may cause it to slip or run compromising finish and appearance and will, at least, reduce its final surface strength and durability.

12.5.3 Hand Spraying Procedure

The procedure, equipment and personnel involved in shotcreting should produce an end-product that is dense, homogeneous, without segregation of aggregate or fibres, and that does not display sloughing, collapsing, excessive rebound or other visible imperfections. Shotcrete should be able to be applied in layers up to 75 mm in thickness with adequate adhesion to the surface or bond to previous layers of shotcrete without sagging or slumping. Shotcreting should be stopped in situations which may adversely affect the quality of the finished product. When shotcreting is resumed, the hardened concrete surface should be prepared in accordance with Section 12.5.1.1. Shotcrete that is segregated, loose, porous or otherwise poorly compacted should be removed prior to the application of additional shotcrete layers.

The concrete pump should be regulated to evenly deliver the wet mix shotcrete at the rate required for the shotcrete application. The shotcrete should emerge from the nozzle in a steady, uninterrupted flow. Where the flow becomes intermittent for any reason, it should be directed away from the work until it becomes constant. The nozzle should be held perpendicular to the receiving surface except that, where necessary, an angle of 0° to 45° to the perpendicular may be used.

Where a layer of shotcrete is to be covered by a succeeding layer, the first layer should be sharply tapered at joints. Feathering of the tapered joints should

not be permitted. The second layer should be placed on the tapered surface. Prior to the application of the second layer, the first layer should be prepared in accordance with Section 12.5.1.1. Curing compounds and bond breaking materials should not be applied to surfaces that will be covered by an additional layer of shotcrete.

For vertical and near vertical surfaces, application of shotcrete should commence at the bottom of the surface with the full thickness applied before applying any shotcrete to overhead surfaces. Rebound must be removed and is not to be integrated into the shotcrete linings.

12.5.3.1 ***Set Up***

Once the crew and equipment have established their work area the material delivery hoses/pipes are checked by connecting them directly to an air supply fitted with a pressure gauge to ensure that they are clear. Most shotcrete machines are fitted with a take-off point near the gauge for this purpose. Dirty pipes and hoses must be cleaned by kinking, twisting or lightly hammering and blowing out. The material-delivery hoses are connected with as few bends as possible and without any kinks. The reducer should be located as close as possible to the pump discharge point. After the equipment is checked, the hose is securely connected to the shotcrete pump. All delivery lines from the pump to the nozzle should be securely fixed and fully lubricated with cement slurry or approved line lubricant. Under no circumstances shall any petroleum products be used to lubricate the lines.

The delivered mix to the pump should be checked for batch time and appropriate slump before being discharged into the shotcrete pump. With accelerated shotcrete mixes, it is essential not to apply shotcrete into the works until it exhibits the correct setting performance for the project and the accelerator dose rate is correctly calibrated at the nozzle. This operation is normally carried out in a nominated trial area. Furthermore, the correct air pressure and volume for the specific spraying operation should be evaluated by the sprayer and adjusted accordingly.

12.5.3.2 ***Spraying Technique***

Distance from nozzle to the receiving face should be between 0.5 to 1.0 m for hand spraying to achieve the highest degree of compaction and lowest

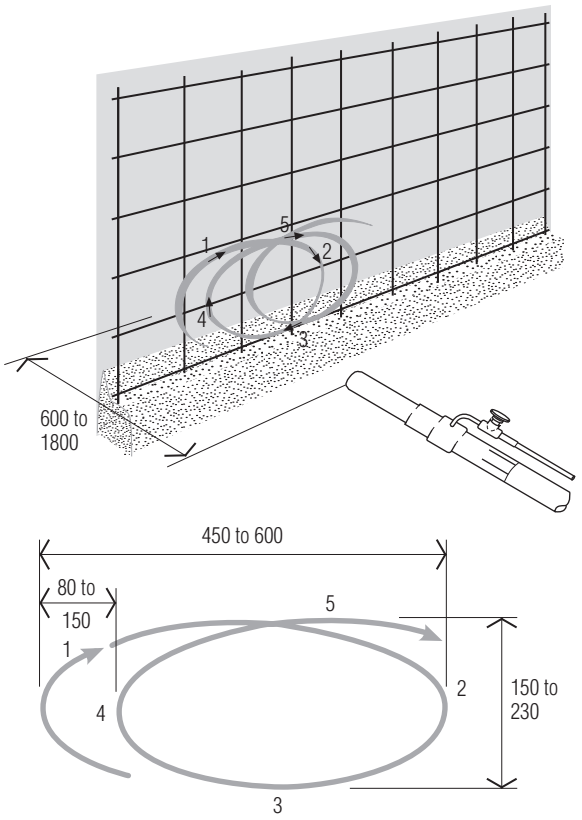

Figure 12.4: *Circular shotcreting motion, and progress of shotcreting from ground up to minimise incorporation of rebound into works*

rebound. The optimum distance is influenced by aggregate size, grading curve, required surface finish, air pressure and speed of conveyed material. The nozzle should be directed perpendicular to the face at all times. Manipulation of the nozzle to place shotcrete during either machine or hand spraying should be a circular to oval motion (Figure 12.4).

The sprayer should firstly fill all over-breaks and zones of weakness such as fissures, faults, gravel zones and soft spots if applicable (this process is normally limited to rock/soil surfaces). Spraying should then commence from the lower sections moving methodically upwards (Figures 12.5). If accelerator is used, dose rates may be marginally increased as the shotcrete application moves from the base up the wall and overhead. In some cases, it may be prudent to apply a series of thinner layers rather than attempting to spray the entire thickness in one pass of the nozzle. Where thick layers are applied, it is important that the top surface be maintained at an approximately 45° slope (Figure 12.6). It is important that no subsidence or sagging of the shotcrete occurs. Caution must be taken

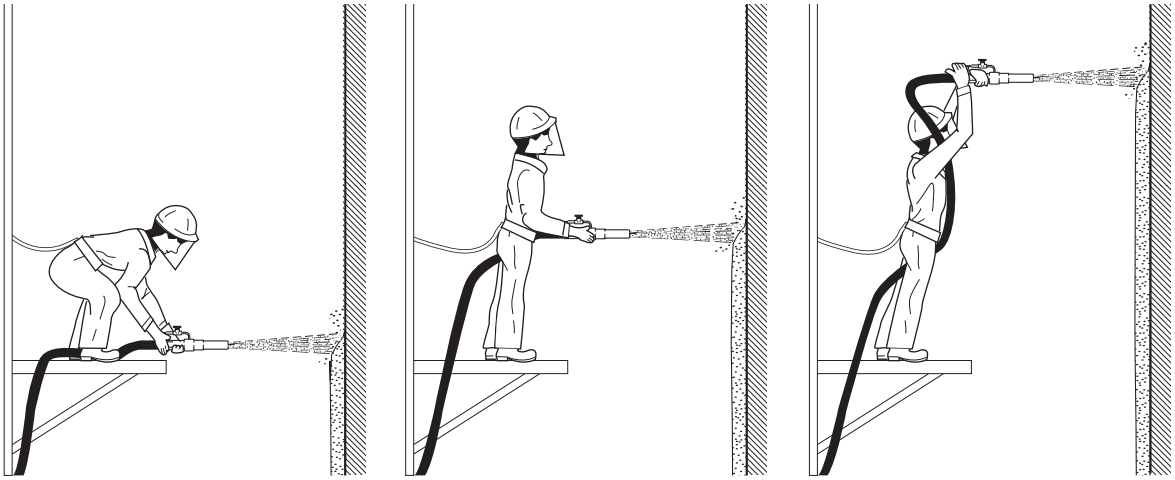

Figure 12.5 *Spraying should commence from the ground and move methodically upwards*

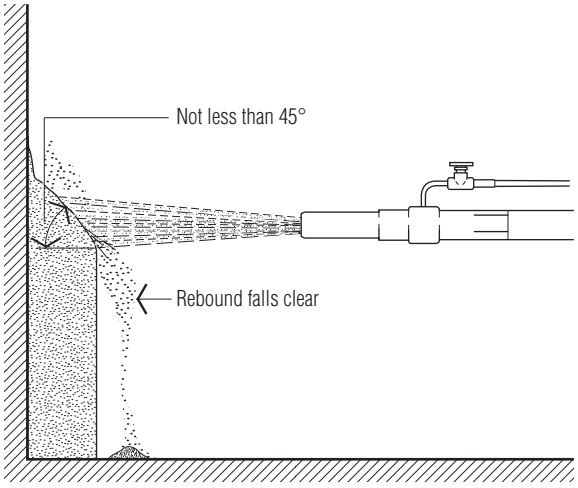

Figure 12.6: *The top edge should be maintained at not less than 45° to avoid rebound material contaminating the shotcrete*

not to incorporate into the wall any rebound lying at the base of the wall.

The shotcrete should emerge in a steady uninterrupted flow. Should the flow become intermittent the operator should direct the nozzle away from the work until the spray becomes uniform. Adjoining surfaces that are not required to be sprayed should be protected from overspray. Overspray on these adjoining surfaces should be removed.

12.5.3.3 ***Encapsulation of Reinforcement***

Any materials or fixtures to be encapsulated by the shotcrete need to be adequately secured and positioned prior to spraying. Steel mesh reinforcement or rebar should be designed and arranged to facilitate encapsulation and minimise rebound (Figure 12.7). When spraying through and encasing reinforcing bars the nozzle should be held closer to the work and at varying angles to permit better encapsulation and to facilitate the removal of rebound. This procedure forces the shotcrete behind the bar while minimising build-up on its front face (Figure 12.8). Where bars are closely spaced and it is impractical to spray one layer at a time, more than one layer of bars may be sprayed concurrently, provided the nozzle changes position to ensure encapsulation. If more than 50 mm cover of plain shotcrete is applied, the likelihood of fall-outs is increased, especially when screeding and floating. Encapsulation of reinforcing bars is very difficult using set accelerated shotcrete, so use of accelerated shotcrete should be avoided wherever possible when spraying bar-reinforced members. Similarly, inclusion of fibres in a mix will interfere with encapsulation of bars and is best avoided.

12.5.3.4 ***Surface Condition of Reinforcement***

At the time shotcrete is placed, the surface condition of reinforcement should be clean such as not to impair its bond to the concrete or its performance in the member. Reinforcement should be supported and held clear of surface to be sprayed with the cover as specified in the design drawings. Any bar/mesh reinforcement is to be kept in the required position through adequate support measures, with overlaps of reinforcement bars/mats arranged in such a way as to avoid the superposition of multiple laps or the concentration of multiple laps in one and the same area.

In general, only light reinforcement should be embedded within the shotcrete. Where multiple reinforcement layers may be required the first layer

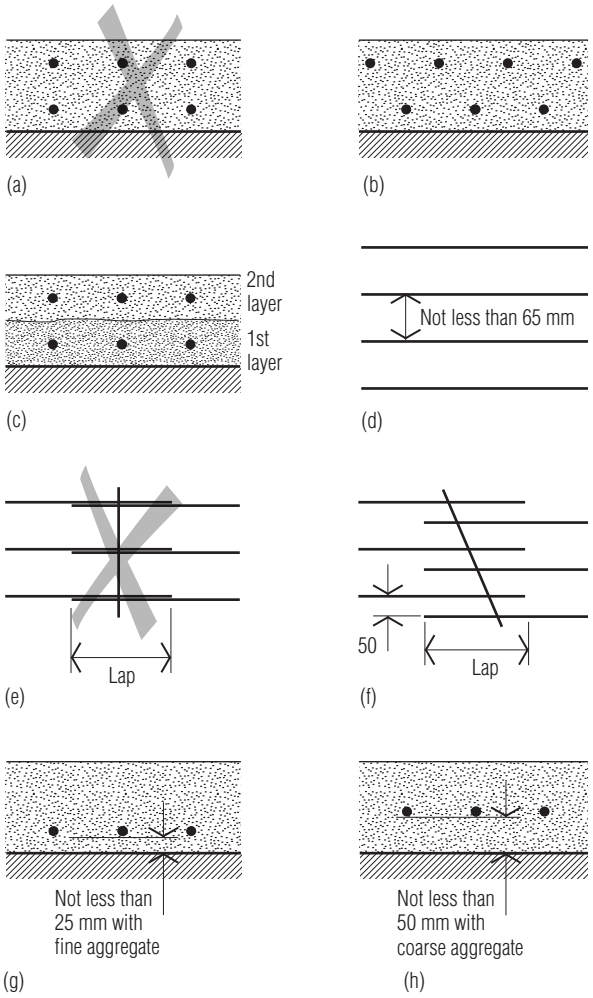

Figure 12.7: *Recommended placement of reinforcing bars relative to substrate and other bars*

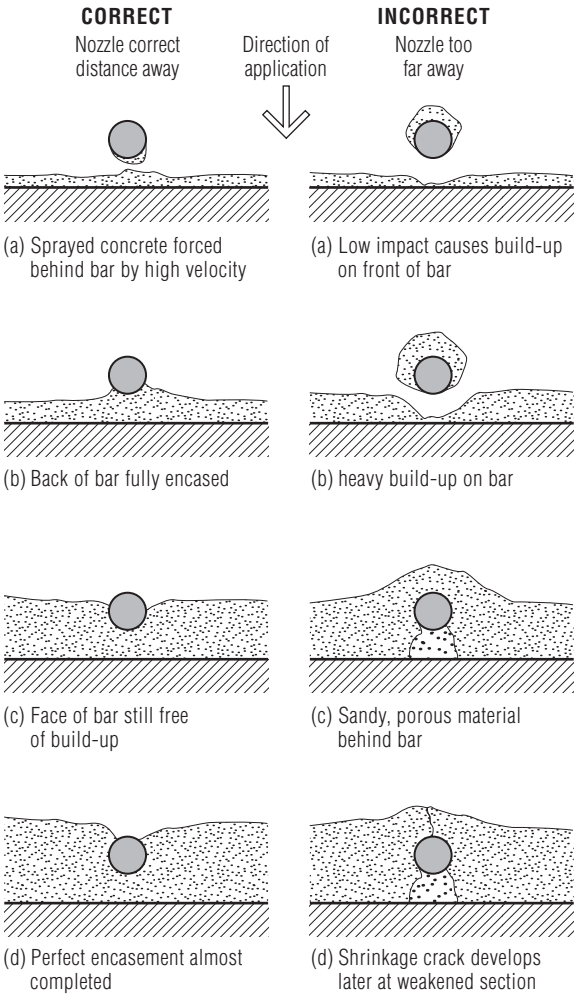

Figure 12.8: *Consequences of poor spraying practice for encapsulation of reinforcing bars*

should be mounted and sprayed to the required line and level by hand before the second layer is attached and sprayed in.

Fibre reinforced shotcrete with additional bar reinforcement must consider the minimum spacing between the supplementary bars which may need to be adjusted to the maximum aggregate size and the length of the fibres. Where supplementary bar/mesh reinforcements of high densities are proposed, it is recommended to undertake specific spraying trials to ascertain that the required quality of the lining can be achieved.

Spraying through multiple reinforcement layers can result in poor compaction, encasement or rebound and shadowing behind bar reinforcement all of which results in an inferior quality of the shotcrete lining. Under no circumstances should shotcrete through full reinforcement cages or high-density zones of reinforcement such as congested overlap areas in a single pass. Because of the increased risk of inadequate rebar encasement, fibres are not recommended to be used in the shotcrete mix when mesh/bar reinforcements of medium or high densities are to be encased.

12.5.3.5 ***Alignment Control***

An effective and proven form of alignment control is necessary to establish the required thickness and profiles of the finished shotcrete. Alignment control can be accomplished by the use of guide wires, guide strips, depth gauges, depth probes, conventional forms, or laser guides (Figures 12.9 and 12.10).

12.5.3.6 ***Rebound***

Rebound is shotcrete that does not adhere to the surface being sprayed and which ricochets out of the area of placed shotcrete. It must not be re-used in the shotcrete machine nor incorporated in the works. When the jet is directed against a rigid surface the proportion of rebound may be higher than normal. Once

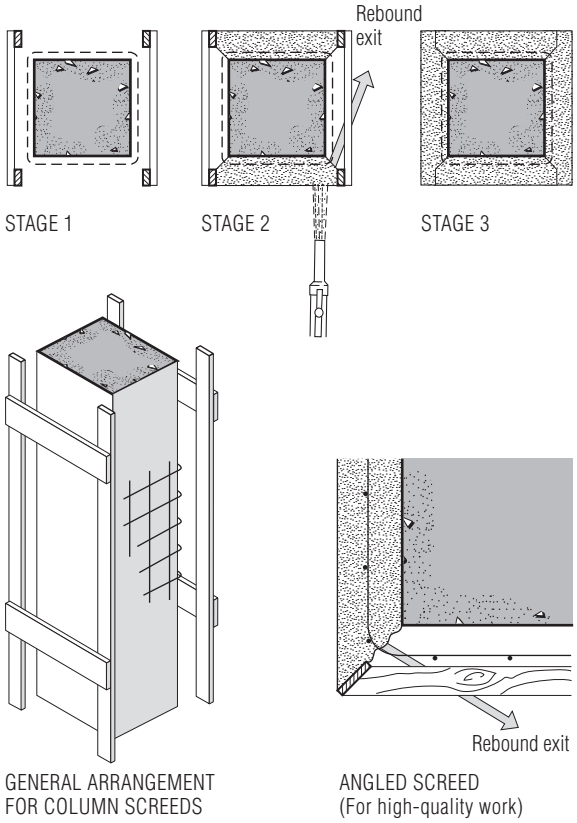

Figure 12.9: *Conventional forms used as alignment control for encasement of an existing column with shotcrete*

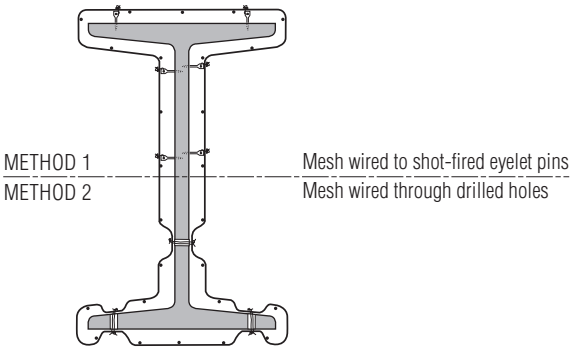

Figure 12.10: *Two methods of anchoring reinforcement to a steel beam for encasement with shotcrete*

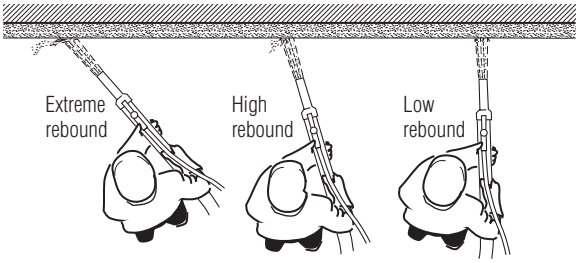

Figure 12.11: *Rebound can be limited by the skill of the nozzleman*

a cushion coat of mortar forms on the intended surface the amount of rebound generally reduces. Thus, thicker sections of shotcrete have lower overall rebound than thin sections.

The percentage of rebound depends on a number of factors including:

- Skill and experience of the sprayer and his operation of the nozzle or manipulator (Figure 12.11). The distance between the nozzle and substrate has a large influence on rebound as well as the angle of application. The angle of application should be as close as possible to perpendicular of the surface.
- Efficiency of the shotcreting equipment, including the air pressure supplied.
- Mix design including aggregate size and grading. Rebound increases significantly when maximum aggregate size is greater than 14 mm.
- Workability of the concrete.
- Selection of supplementary cementitious materials such as amorphous silica powder or similar materials also helps stick the shotcrete to the wall.
- Type and roughness of surface.
- Depth of shotcrete already on the substrate.

12.5.4 **Joints**

12.5.4.1 ***Construction or Expansion Joints***

End-of-day joints and construction joints are very important in the satisfactory use of shotcrete for construction and protection. An unformed end-of-day or construction joint (Figure 12.12a) should come to a tapered edge, over a width of 200 to 300 mm for thicknesses up to 75 mm, and with a proportionately greater width for greater thicknesses. The surface on the taper is brushed to remove laitance and rebound, and allowed to set, but is not to be cut or trowelled in any way. Before shotcreting recommences, the taper is cleaned with an air-water blast and wetted. The whole taper is covered with fresh concrete as soon as possible and the thickness built up from there. Where the joint is expected to transfer compressive load the joint should be formed as a butt joint. For example, this would typically occur in a longitudinal joint in an arch or wall.

Screed joints and stop-end joints (Figure 12.12b and 12.12c) are treated similarly; they allow for more even joint work. Joint (b) is often used where

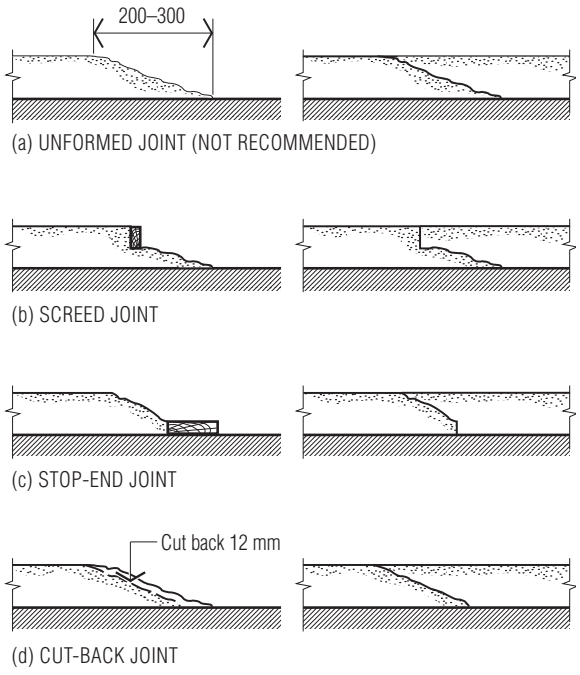

Figure 12.12: *Recommended Practice for Joints in Shotcreted Walls*

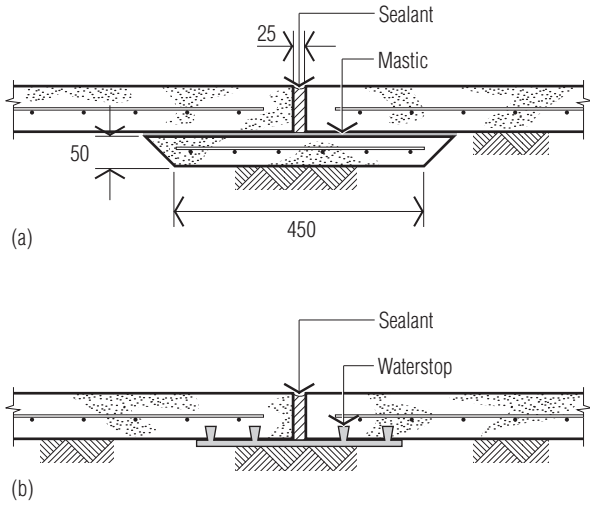

Figure 12.13: *Two methods of producing water-tight joints in shotcreted walls*

the spraying ends at a construction joint. The use of a chemical-bonding agent can be used. Joints (a), (b) and (c) can be further improved by coating the taper with a bonding agent prior to spraying. A cut-back joint (Figure 12.12d) is used with marine work; the top surface of the taper has been removed by gentle hacking to prevent possible joint failure due to salt contamination of the tapered surface.

For water-tight joints, the use of internal water stops is not recommended as they provide traps for rebound. Figure 12.13 shows recommended approaches for water-tight joints. Where no specific joints are required in design dummy or V joints are often cut into the face of shotcrete at intervals to break up long spans of walls and attempt to induce controlled cracking.

12.5.4.2 ***Contraction or Control Joints***

Contraction joints may be provided by the pre-positioning of full-thickness strips, usually wood or steel, which are left in place, or by saw cutting the shotcrete shortly after it has achieved final set. The spacing of contraction joints depends on the application and should be designated on the plans. In practice, the spacing usually varies between 5 to 10 m on expected movements.

With a skilled operator it is possible to achieve high-quality decorative and unique architectural forms such as rocks, sandstone blocks and rock faces (Figure 12.14).



Figure 12.14: *Skilled operators can produce a high-quality product in many varied circumstances.*

12.5.5 **Shotcreting Sequences**

12.5.5.1 ***Retaining Wall***

The sequence of photos shown in Figures 12.15(a) to (f) shows the method by which a reinforced retaining wall can be constructed as a series of shotcreted shoring panels between piles. The process begins by installing the piles followed by installation of ground anchors and placement of reinforcing steel to the required dimensions and profile. Spraying commences at the base of each panel (a) and proceeds by working up toward the top (b). Once the top has been completed the shotcrete surface is marked using a level (c) and screeding proceeds (d). The walls are then floated (e) before a final finish is applied using a sponge (f).



Figure 12.15: *Summarising the general process in a typical project. (a) begin spraying from the ground up, single- layer reinforcement preferred (b) topping-off, keep top surface at not less than 45° (c) establishing lines using spirit level (d) begin screeding to reference surface (e) complete screeding and floating (f) finish surface with a sponge*

12.5.5.2 ***Swimming Pool***

(a) The pool is formed up, reinforcement and plumbing installed ready to be sprayed. (b) Spraying starts from the radius at the bottom of each wall and proceeds until the walls and radii are completed. (c) As the walls are sprayed, cutting and screeding commences, (d) the tops and/or coping are then cut to level. (e) The floor is then sprayed, and finally (f) the steps, spa, and other details are cut and hand-sculpted.



Figure 12.16(a): *Formwork, steelwork and fittings ready for shotcreting*



Figure 12.16(b): *Spraying the walls from the bottom up*



Figure 12.16(c): *Cutting and screeding of walls following spraying*



Figure 12.16(d): *Cutting the walls and coping*



Figure 12.16(e): *Spraying the floor of the pool*



Figure 12.16(f): *Cutting and hand-sculpting the steps*

12.5.5.3 ***In-ground Holding Tank***

Shotcrete is an effective method to place concrete onto ground surfaces to produce free-form structures such as holding tanks. The sequence of photos in Figures 12.17(a) to (f) shows the construction of a storm water holding tank. After excavation of the hole and installation of reinforcement and services (if required) (a), spraying commences at the base of each inclined wall (b) and proceeds upward to the crest (c). The sprayed surface is progressively cut, screeded, and floated (d) until all the walls are completed. The floor is cast using the same shotcrete mix as used for the walls (e). The floor and walls are finished using steel trowels or a bull float (f).



Figure 12.17(a): *Reinforcement in place prior to start of spraying*



Figure 12.17(b): *Spraying commences at base of each wall*



Figure 12.17(c): *Proceed to the top of each wall and cut to finish*



Figure 12.17(d): *Cut, screed, and float each wall, finish using steel trowel*



Figure 12.17(e): *Cast the base of the tank using the same shotcrete mix*



Figure 12.17(f): *The tank floor is completed using bull floats only*

12.6 MECHANISED SPRAYING

Mechanised spraying is used extensively in underground and open pit mining and in civil tunnelling and slope stabilisation activities. Mechanised spraying (most commonly using the wet mix system) allows the application of higher volumes of shotcrete and has the advantage of remote application where the machine operator can guide a boom mounted nozzle to reach areas that would otherwise be inaccessible from a position of safety. This section relates primarily to the use of mobile, rubber tyred, wet mix shotcrete machines as described in Section 9.3, though other mechanised methods are also discussed briefly. Typical machines are shown in Figure 12.18.

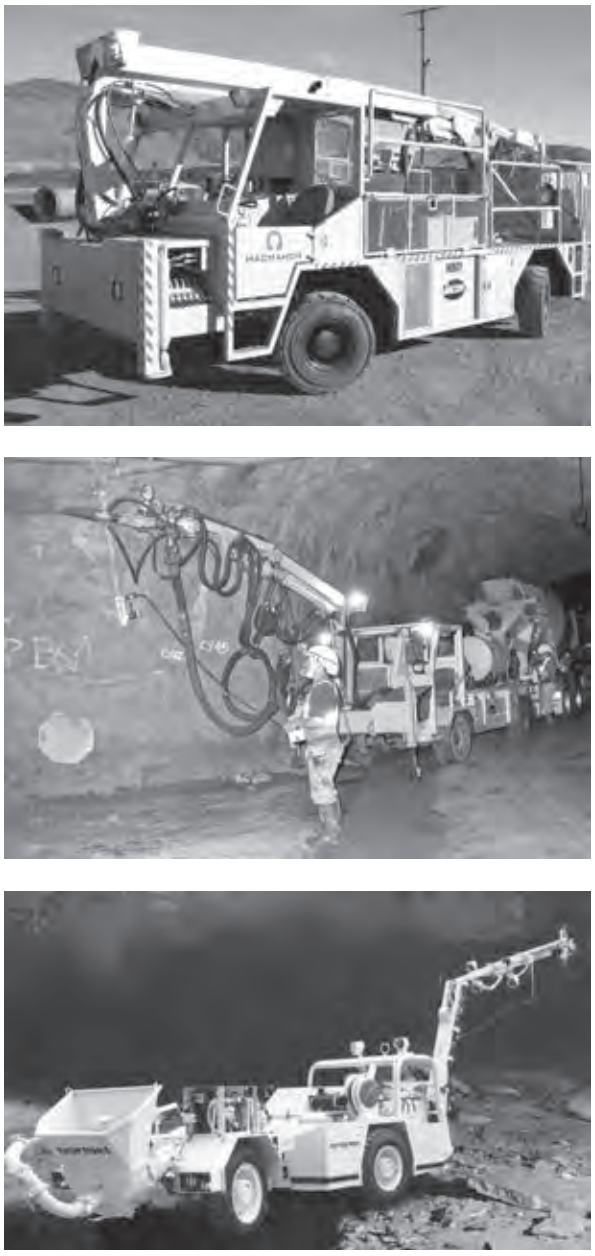

Figure 12.18: *Examples of wet mix spraying machines*

The advantages of mechanised spraying include safety, higher output which can reduce cycle times, cost savings due to reduced labour and rebound, improved quality and improved working conditions for the sprayer.

12.6.1 Set Up

12.6.1.1 *Inspecting for Hazards Prior to Spraying*

Before approaching any area where shotcrete is to be applied, the machine should be parked in a safe position and an inspection of the work area should be carried out on foot. As shotcrete is often applied in areas where there is no or insufficient ground support existing, the risk of rockfall should be assessed and a safe position within supported ground should be ascertained for the rig to be set up. In an underground environment, the ventilation to the work site should be assessed for its adequacy to remove the dust and fumes that will be generated during spraying from the work area. Access to the work area by other personnel and equipment not related to the shotcrete process should be restricted through use of signage and barricades.

The surface to be shotcreted should be examined by the supervisor or geotechnical engineer for any, loose ground, water seepage and any signs of ground movement. Once the area has been assessed and signed off, the shotcrete operator can move the machine into position. The shotcrete operator should also take the opportunity to identify any areas that will be difficult to spray (such as shadows). In an underground environment, adequate lighting is critical to ensure that these hazards can be identified by the operator and a high-powered hand-held torch is recommended for inspections.

12.6.1.2 *Set Up of Machines*

Spray machines are usually supplied with concrete through the use of a mobile agitator truck. These trucks may be used to both mix and transport the concrete or simply to transport it (see Figure 12.16). Commonly, the truck will discharge the concrete mix into a hopper located at the rear of the spray machine. The concrete agitator truck will reverse up to the spray machine hopper and is guided into position



Figure 12.19: *Examples of underground agitator trucks used in mines*

by a spotter. The spotter needs to remain in view of the agitator truck operator at all times. All personnel involved in this process must be aware of the risk of being crushed between the spray machine hopper and the rear of the agitator truck and communication is of paramount importance, especially in an underground environment where it will be dark and may be noisy.

When working on inclines or declines, agitator truck wheels are chocked so that uncontrolled movement of machinery does not occur. The shotcrete machine is stabilised through the use of hydraulic jack legs and can also use wheel chocks in case of jack leg failure. Conventional road-going agitators are not recommended for use in mines because they do not have brakes of sufficient type and capacity.

Before any shotcrete is sprayed, the shotcrete machine should be carefully coated with a layer of form oil to assist with cleaning of the machine after spraying. The shotcrete nozzle should be checked for cleanliness and wear. Both of these factors can affect the shotcrete velocity through the nozzle and hence the compaction that is achieved. Most nozzles have some form of wear marker inherent in their design which will indicate when they are required to be changed.

Accelerator lines must also be checked before spraying is commenced. The flow of the accelerator can be checked from a gauge on the pump, or assessed through timing the discharge into a calibration jug. It should be ensured that the dosage rate matches the specified dose rate for the cement content of the mix.

The shotcrete machine's pump and delivery lines must initially be primed using a small amount of slurry. This material should be discharged onto the floor of the excavation and not applied to the surface to be supported. Modern chemical lubricants are available for priming the pump and delivery lines.

12.6.1.3 ***Dealing with Delays***

In a civil and mining environment it is not unusual for delays to shotcreting to occur. In the event of delays, care must be taken to prevent hydration of the concrete. Stabiliser must be applied to the load at the recommended dosage rates and continuous mixing should be avoided. Any chemical or water addition after batching should be noted on the concrete delivery docket records. Water addition should be avoided due to detrimental effects on strength. When the load is able to be sprayed again, the bowl should be spun for a sufficient period of time before discharge to ensure that the load is remixed adequately.

12.6.2 **Scaling**

There are several types of scaling used in civil and mining applications, though the most common are mechanical scaling using either a purpose-built scaling machine or a development drill or "hydro-scaling" using a water jet (Clements et al., 2004). Hydro-scaling improves bond strength in addition to removing lose ground. Scaling may not be appropriate at all in some situations where very weak rock or soils exist or where backfill masses are being mined through. In these instances, the substrate is usually prepared by lightly washing the surface only.

Where shotcrete is to be applied to highly jointed ground, mechanical scaling using a hammer or drill bit is not necessarily required. This is because the small fissures and cracks in the ground will be filled with shotcrete, thus stabilising the loose ground with the added advantage of maintaining a better drive profile.

Hydro-scaling uses a high pressure water jet to remove loose rocks and dust from a surface. The water pressure will typically be kept between about 3000 psi and 6000 psi to be effective. Hydro-scaling pumps are usually fitted to shotcrete spray machines to enable the same piece of equipment to both hydro-scale and spray. The hydro-scale nozzle is located at the head of the boom, close to the spray nozzle.

When hydro-scaling an area, the shotcrete adjacent to where the current application will occur should also be hydro-scaled at least one metre back from the fresh rock to ensure adequate bond of the overlapping shotcrete to the previously applied shotcrete. The operator should then progressively scale the rock to be sprayed from closest to farthest and from top to bottom such that the boom is never exposed to unscaled ground. If large, unstable blocks are visible that may pose a hazard to the boom during spraying and cannot be removed using hydro-scaling, mechanical scaling may be required before shotcrete application commences. If an area is mechanically scaled, it is still advantageous to hydro-scale to ensure complete removal of any remaining dust and films.

12.6.2.1 ***Preparation of Substrate***

Preparation and thorough cleaning of the substrate is one of the most critical steps to the successful application and subsequent performance of the shotcrete. This process must take place immediately before the application of shotcrete and if there is a delay then the substrate should be re-cleaned. A thoroughly cleaned substrate will greatly reduce the fallout that can waste both time and material, and improve the bond, whilst reducing dust during the application. It is important that every single part of the substrate where it is intended to apply shotcrete is cleaned thoroughly.

The substrate should be cleaned using water and compressed air blown through the nozzle, although if a hydro-scaler is available this works even better. In places where the substrate contains clay, silt, sand and other loose material, the amount of water can be reduced or, if necessary, use only compressed air to blow over the substrate.

Cleaning should always take place starting at the top closest to you and work your way across from one side to the other slowly moving further away till the entire back has been cleaned, then proceed to do the vertical walls working away from yourself towards the face, and then down and back towards yourself till you finally end up at the bottom. The idea is that you clean in such a way that no loose material can get knocked onto the boom.

The purpose of cleaning is to remove any residue, loose material dust or any other foreign material that will inhibit the bond to the substrate.

Surfaces must always be damp prior to shotcrete application. By cleaning the entire substrate that is going to be sprayed this also gives the nozzleman an opportunity to check the machine is correctly positioned so that the nozzle can reach the entire area to be sprayed at the required nozzle distance of minimum 1metre and maximum 2 metres and remain perpendicular to the substrate.

12.6.2.2 ***Thickness Measurement and Control***

Methods of thickness control during and after spraying include using metal probes of a set length mounted on the end of the shotcrete boom to check the depth of the wet shotcrete and the use of stick on depth indicators which may be applied before spraying commences. Both methods have some disadvantages: boom mounted probes can cause damage to delicate boom hydraulics if they are not used carefully, do not provide an indication of excessive thickness, and do not provide a permanent record of thickness. Stick on depth indicators are time consuming to apply, are often dislodged by the force of spraying and may be obscured by the spraying. Both methods only provide point data, and when shotcrete is applied to rough surfaces this can be far from representative.

Shotcrete thickness can also be measured by several methods post spraying. The most common method in use is the drilling and measuring of probe holes, though the small number usually drilled combined with the fact that they only provide point data suggest this method is of questionable value. More representative data can be obtained through the generation of before and after three dimensional surveys of the areas being sprayed. This has been achieved using laser scanners and more recently has

been achieved through photogrammetry. A survey must be taken after hydro-scaling and then one after spraying. The two surveys can then be compared and a "thickness map" generated.

If spraying an area where access is required to continue tunnel advance, it is common to spray a "re-entry panel" of shotcrete on an area of wall under supported ground. This panel can be marked with the date and time of spraying and a penetrometer may then be used to check the strength development of the shotcrete without entry into the area sprayed being necessary. Alternatively, a historical record of beam end tests is carried out to provide a good guide to re-entry times according to the required specifications. All sprayed areas should be barricaded, or a sign used to indicate the hazard of wet shotcrete.

12.6.2.3 *Other Considerations*

Rock surfaces that are to be shotcreted may be required to be geotechnically mapped or photographed as they will be obscured by the lining. Ideally this is performed after scaling and before spraying from a position of safety, i.e. under supported ground.

Excessive water ingress is a problem for mechanical spraying as with hand spraying and measures may need to be taken to reduce or divert the water flow prior to spraying. Alternatively, drains may be pre-installed to allow the water to flow out of the shotcrete instead of building up pressure behind it.

12.6.3 Spraying Procedure

12.6.3.1 *Preparing to Spray*

Before filling the hopper with shotcrete, the shotcrete line needs to be lubricated to avoid blockages. This can be done with a grout where 15–0 kg of cement is mixed with 10 litres of water. Alternatively, a lubricating agent that is mixed with water can be used. Fill the grout directly into the reduction pipe, connect the pipe and then after checking the cleanliness of the grid lower it and request the concrete agitator truck driver to give the shotcrete a good mix for a minute or two at mixing speed before starting to discharge the shotcrete into the hopper. Fill the hopper with shotcrete.

A visual inspection of the shotcrete mix's consistency and slump should be assessed by the sprayer who should also check that if it the mix is meant to contain fibre then that it does contain fibre.

Once the hopper is two thirds full then start pumping at a low output with the line disconnected from the nozzle. Pump until the grout has passed through the line and shotcrete is starting to come out of the line, stop pumping, connect the line to the nozzle, do a final check that the accelerator is at the correct setting.

Just before spraying commences, the sprayer should ensure the position chosen to spray from is under supported ground and has good visibility of the ground intended to spray. Move the nozzle to the starting point, but point the nozzle away from the substrate, turn on the air and then the accelerator and do a visual check that the air stream from the nozzle contains accelerator.

Check the air pressure and volume is correct (6 bar at a minimum of 10–12 m^3 per minute), avoid spraying plain accelerator onto the substrate as this may cause bonding issues. Start the concrete pump at a slow speed and after a few strokes adjust it to normal operating speed.

12.6.3.2 *Spray Technique*

To minimise rebound and maximise compaction, the nozzle must always be kept a minimum distance of one metre and the nozzle must never exceed two metres from the surface being sprayed. The correct nozzle angle is also important and should be as close as perpendicular to the surface as possible. Overdosing of accelerator adds to rebound exponentially.

The operator should start at the lowest point and work forward in a horizontal oscillating pattern to spray an even layer of shotcrete onto the surface. The shotcrete should be applied in the same fashion that you would build a brick wall, spraying in a horizontal strip away from yourself then moving up and spraying in a horizontal strip back towards yourself.

Only when both sidewalls have been sprayed should the sprayer then start to spray the backs, this time working from one side to the other starting at a point closest to the machine and slowly retreating away from the machine.

The previous text emphasised the importance of cleaning the substrate before applying shotcrete and to ensure the shotcrete is applied to a clean surface. The golden rule is never to spray above an area that has not

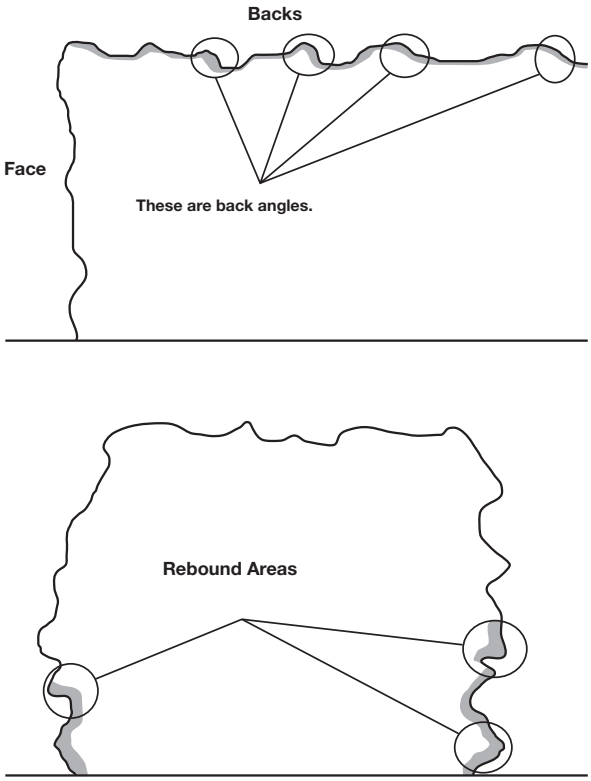

Figure 12.20: *Illustration of back angles and rebound areas common in tunnels*

already been sprayed because if you spray above an unsprayed area you will contaminate it with rebound, lose potential bond, and could experience fallouts.

It is very important that the oscillating function on the machine is working and used as this gives a good even spread of shotcrete and greatly reduces unnecessary nozzle movements which not only gives an uneven spread of shotcrete but also unnecessary wear on the nozzle and extra work for the sprayer.

Shotcrete is generally applied in layers of approximately 25 mm (especially when being applied overhead) to prevent fallout. Ideally, the operator should wait ten minutes between layers to ensure adequate set of the first layer before applying the second. Most mining applications require shotcrete thickness of between 50 mm and 100 mm and civil applications commonly require a thickness in excess of 100 mm. Thickness control is important to ensure not only that adequate thickness is being achieved, but also that the application is of even thickness and that shotcrete is not being wasted due to excessive thickness. The best way to ensure even thickness understand the output of your machine and to spray as described above in an orderly manner completing one wall at a time slowly building up from the bottom, avoiding fast movements adjusting movements to the output of the concrete. Applying a uniform pass thickness. Haphazard spraying where the sprayer does a lot of unnecessary fast boom movements and sprays patches here and there results in poor thickness control a lot of effort and a terrible result.

If there is a fissure or fault present or any pockets that need to be filled and it is determined that this should be sprayed first then once it has been sprayed and sufficient time has passed for the shotcrete to have set then the entire area to be sprayed must be cleaned properly with compressed air and water before any general spraying begins.

If the sprayer experiences a drop out then they should avoid spraying that area immediately, rather wait to let the surrounding shotcrete set. When filling dropouts apply thinner layers with time between to allow setting.



Figure 12.21: *Remote shaft lining rig in construction yard*



Figure 12.22: *Remote shaft lining rig being used to spray inaccessible area*

12.6.4 **Cleaning the Machine**

Cleaning should take place directly after spraying is completed to avoid any build up of concrete within the hopper and lines and on the body of the machine. Cleaning should be completed by ensuring that the concrete pump is in the correct position (may differ depending on the type of machine), removing the nozzle and fitting a “blow out” cap in its place. The hopper door should be dropped and any remaining shotcrete should be hosed out of the hopper. All concrete lines should be back blown, first with air until the concrete is cleared and then water should be used to flush the lines until clean water runs through them and out of the bottom of the hopper. Pump cylinders should be inspected to ensure that they are free of all concrete. The entire machine should then be cleaned using a high pressure cleaner and form oil sprayed over it again.

12.6.5 **Application by Specialised Methods**

Several other mechanised methods of shotcrete application have been developed for the lining of shafts and other vertical openings. Remotely applied shotcrete has increased in popularity due to safety requirement that personnel be removed from from areas where there are hazards due to the presence of unsupported ground.

12.6.5.1 ***Remote Shaft Lining***

Two types of mechanised shotcrete application are used in vertical developments. If a man-riding platform is being used in the shaft to facilitate the installation of bolts, services and other support, shotcrete may be applied to the shaft walls in advance of the platform by the use of a shotcrete spray head mounted below the platform.

Fully remote control rigs (Figure 12.21) have also been developed for use in shafts where there is to be no personnel access at all. The machines are operated from a control cabin on the surface and lowered down the shaft by way of a winching system. Cameras can then be used to monitor the spraying. Shaft depths of up to 400 m have been sprayed with this system.

Typically, dry shotcrete is used in vertical applications greater than 50 m in depth. This is due to the weight of the material that must be conveyed down the delivery lines.

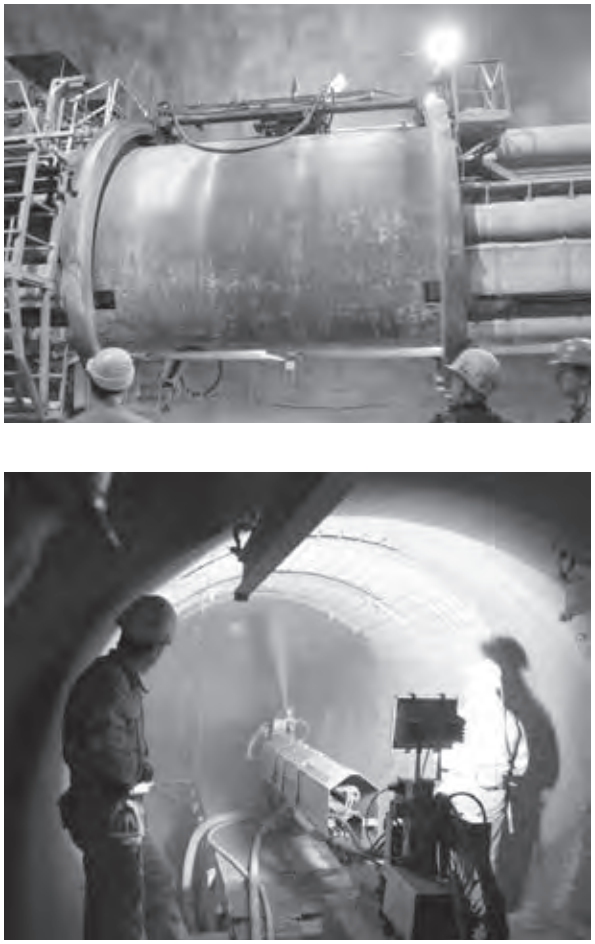

Figure 12.23: *Shotcrete spray robot mounted on a large diameter TBM (top) and a spray boom mounted on a small diameter TBM (above)*

12.7 **CURING**

The same curing considerations for concrete apply to shotcrete. Shotcrete, like concrete, must be properly cured so that its potential strength and durability are fully developed. This is particularly true for thin sections, textured surfaces and lower water/cement ratios that can be associated with shotcrete.

All shotcrete surfaces should be cured by one or more of the following methods:

- Wet curing.
- Liquid membrane-forming curing compounds.
- Internal curing agents.
- Natural curing.

Wet curing may be carried out using hessian, canvas or plastic sheets or other suitable materials provided they are kept continually wet. Water used for curing should comply with AS 1379. Wet curing should be applied to surfaces immediately after the completion of the application and finishing operations. Where wet

curing is to be used, a minimum of three continuous days water curing or equivalent should be specified, and in particular applications, seven continuous days water curing or equivalent may be specified.

Liquid membrane-forming curing compounds should comply with the requirements of AS 3799 (Clements et al., 2004). Curing agents that impair bond should not be used where a further layer of shotcrete is to be applied. If necessary, the curing agent should be removed by water jetting, grit blasting or a similar process, before application of the next layer (e.g. EFNARC specification, Clements et al., 2004).

Internal curing agents are available and have been used on many projects. They conform to the requirements for curing compounds in AS 1379 Specification and supply of concrete.

Natural curing may be considered if atmospheric conditions surrounding the shotcrete are suitable, such as when the relative humidity is at or above 85%. Care should be taken to ensure that the concrete does not dry out due to reduced relative humidity, higher air temperature or increased wind/air speed particularly in tunnels.

Rapid drying of shotcrete at the end of the specified curing period should be avoided. For all curing regimes, the shotcrete surface should be maintained at a temperature not less than 5 °C throughout the curing period.

There is great difficulty in curing shotcrete in the underground mining environment due to the hot rock surface, evaporation through high velocity ventilation flow, and the lack of access in tunnels being actively developed. Shrinkage cracking of the shotcrete is exacerbated due to this lack of curing. Water spray curing is sometimes used in civil applications though for mining where shotcrete is often applied “in-cycle” it would obstruct production and extend cycle times.

Internal curing agents are also available and have been estimated to increase the performance of mechanical properties of shotcrete by at least 20% for a 2–5% increase in cost (Windsor, 2004). They are not currently used widely in mining but represent a potential area of improvement.

13

Performance Requirements

13.1 QUALITY CONTROL

A program of Quality Control and Quality Assurance is essential to the achievement of quality shotcrete. The objective of Quality Control is to ensure that the performance of the shotcrete in-place meets minimum design requirements. Quality Control covers many different facets of shotcrete production and placement. This will usually start with mix design, testing and approval of constituent materials and placing equipment, and selection of suitably qualified personnel, and proceed to on-going performance testing of the in-place shotcrete. Pre-construction trials can be used as part of benchmarking for Quality Control on major projects.

Pre-construction trialling should be carried out using plant, materials, and personnel identical to that proposed for the works and be undertaken in sufficient time before the commencement of the works to allow completion of testing, resolution of problems, and approval. However, pre-construction trials on their own do not guarantee that performance requirements will be met and thus ongoing Quality Control testing is an essential part of overall Quality Assurance.

13.2 PRE-CONSTRUCTION TRIALS

At least a month prior to commencing construction, test panels and in some instances a section of sample work should be sprayed using each proposed base mix. The sprayer should be experienced and the shotcrete equipment should be in good working order. The test panels should be at least 600 x 600 mm constructed to a thickness that is at least twice the diameter of cores extracted from the panel. Where reinforcement in the form of steel fabric, bars, or fibres is used, the same reinforcement shall be provided in at least half of the panel. Separate test specimens shall be made for toughness testing and the dimensions of these will depend on the requirements of the toughness test selected for the project. Test panels should be inclined at an angle of about 45° against a vertical surface during spraying. It is recommended that at least three cores and at least five toughness panels be produced and tested for determination of performance benchmarks during pre-construction trials.

Sampling and testing will usually be carried out for compressive strength, density, permeability and toughness. Test panels should be covered in plastic and/or curing agents as soon as practical after production to prevent moisture loss. Where it has been shown that the same materials, mix designs, equipment, procedures, and personnel have given satisfactory results in similar works, the Superintendent may exercise discretion in accepting the construction of test panels concurrently with the first shotcrete placed in the works. If required, sections of sample work may also be assessed for specified finish.

The following results should be assessed as part of pre-qualification of a mix for infrastructure projects:

- The average result, for each concrete parameter specified for the cast state, of specimens sampled from the trial mix (transit mixer).
- The average result, for each concrete parameter specified for the sprayed state, of specimens extracted from the test panels.
- The average result for concrete density and relative concrete density taken from the transit mixer and extracted from the works.
- The result of toughness testing.

The panels should be inspected to ensure the minimum thickness is achieved, and internal cut surfaces are free of defects such as voids, lenses, and poorly consolidated regions. An assessment should be undertaken of the measures required to achieve dense and homogeneous shotcrete without segregation, sloughing, collapsing, excessive rebound, or other visible imperfections.

13.3 FREQUENCY OF TESTING

The frequency of testing of shotcrete will depend on the type of project under consideration, the importance of the structure, and the total volume of shotcrete involved. The frequency of testing can be specified on the basis of volume of shotcrete consumed, area of shotcrete sprayed, or time.

Recommended frequencies for civil tunnel and underground projects are given in Table 13.1, while those for mining applications are given in Table 13.2.

Table 13.1: *Recommended frequency of testing for civil tunnel and underground projects*

Characteristic analysed	Test method	Minimum frequency
Supply and delivery of concrete		
Grading of coarse aggregate – Deviation from nominated grading	AS 1141.11	One per week
Grading of fine aggregate – Deviation from nominated grading	AS 1141.11	One per week
Slump	AS 1012.3.1	One per batch of concrete
Production of test panels		
Construction of production test panels (with the works)	–	One panel per 50 m^3 or per day of spraying
Thickness and visual inspection		
From the Works – Frequency of drilling holes	–	One random hole for each 50 m^2 or part there of
Determination of 28-day compressive strength, density and relative density		
From concrete supply – Frequency of moulding specimens and testing	AS 1012.8 and AS 1012.9	One set of 3 cylinders per 50 m^3 or part there of
From test panels – Frequency of drilling test specimens	AS 1012.14	One set of 3 cores per Test panel
Determination of water penetration depth		
From test panels – Frequency of drilling test specimens	AS 1012.14 EN 12390 Part 8	One set per week's production
Determination of toughness (energy absorption)		
From production of shotcrete - Frequency of making test specimen sets	ASTM C1550	One set per one day's production
Determination of residual flexural strength		
From production of shotcrete Frequency of making test specimen sets	EN 14651	One set per one day's production

Table 13.2: *Recommended frequency of testing for mining applications*

Characteristic analysed	Test method	Minimum frequency
Supply and delivery of concrete		
Grading of coarse aggregate – Deviation from nominated grading	AS 1141.11	One per month
Grading of fine aggregate – Deviation from nominated grading	AS 1141.11	One per month
Slump	AS 1012.3.1	One per concrete test load
Production of test panels		
Construction of production test panels (with the works)	–	Once or twice per week
Thickness and visual inspection		
From the Works – Frequency of probing	–	One random probe or hole for each 50 m^2 or part thereof
Determination of 28-day compressive strength, density and relative density		
From concrete supply – Frequency of moulding specimens and testing	AS 1012.8 and AS 1012.9	One set of 3 cylinders per 50 m^3 or part thereof
From test panels – Frequency of drilling test specimens	AS 1012.14	One set of 3 of cores per Test panel
Determination of toughness		
From production of shotcrete – Frequency of making test specimen sets	ASTM C1550	One set per week or per 250 m^3 or part thereof, whichever is more frequent

13.4 QUALITY SYSTEMS

13.4.1 General

Each project may have a particular level of quality assurance requirements or quality system in place. A shotcrete quality assurance plan should be prepared for every project and can be used as a stand alone plan or can be integrated into the project quality system.

13.4.2 Quality Assurance Planning

Successful shotcreting requires a detailed and comprehensive quality-management plan that provides traceability on all aspects of the process and allows the contractor to take effective and appropriate action should any problem be identified (AS/NZS-ISO 9001). Quality Assurance encourages contractors to self-diagnose problems and continuously improve processes to maintain the consistency of the QC testing regime. Quality Assurance should not be seen as a burden but an opportunity to learn about shotcreting skills and methods of optimising performance. Quality Assurance is particularly useful for the training of staff but only if operators are included in feedback on performance and records that are properly maintained and audited. An example of a simple management plan is shown in Table 13.3.

13.4.3 Records

Accurate records should be kept of the concrete supply and shotcrete placement for each project. The records should include, but not limited to, the following:

- All materials delivered to the concrete pump and spraying machine. The provision of Manufacturer's Identification Certificate in accordance with AS 1379 should be provided.
- The shotcreted area each day should be recorded by referencing to established grid lines or similar notations. Each batch (truck load) of materials delivered to the machine should be recorded and noted as to the shotcreted areas it has been applied to on the site.
- Any malfunctions of equipment which may result in unsatisfactory in-place shotcrete.
- Locations of unscheduled joints and their treatment.

Table 13.3: *Typical basic management plan*

Parameter	Test parameter	Comments
Pre-shotcreting	Mix composition	Pre-determined based on approved mix
	Grading	Sieve analysis
	Concrete production	Consistency and uniformity are essential
	Stock levels	Buffer stock essential
	Storage conditions	Stored according to suppliers' recommendations
	Equipment condition	Preventive maintenance and daily inspections
	Services (power, water, lighting)	Must be checked each shift
	Safety	Suitable risk assessment and safe work procedures should always be used
During and after shotcreting	Substrate condition	Must be checked and prepared to a suitable standard
	Accelerator level	Set based on conditions and specified limits
	Early strength	Minimum strength requirements should be checked before re-entry
	Thickness	Use gauges, probes, or drilling
	Rebound	Frequently monitored by nozzleman
	Surface finish	Visual inspection
	Curing	Monitor changes in ambient conditions
	Test samples	Use accredited facilities
	Safety	Suitable risk assessment and safe work procedures should always be used
Days after shotcreting	Adhesion	Conduct soundings for bond
	Effectiveness of ground support	Monitor ground stability

14 Test Methods

14.1 INTRODUCTION

Numerous tests have been devised for the purpose of determining the properties of shotcrete in the wet and hardened states. The following is a list of available test methods for the determination of these properties. Experience in regular use of each of these test methods increases the reliability of results. Australian Standard test methods must always be used where available. However, as appropriate Australian Standards do not exist for many of the properties commonly required for shotcrete, international standards can be used in these cases. Where more than one foreign standard is available for tests related to a particular property, this Guide will provide a recommendation as to the most appropriate method to use. See Chapter 15, *References,* for a complete list of appropriate Australian and International Standards.

When any of the following tests are required to be undertaken a NATA-accredited laboratory that is accredited to undertake the test in question should be used.

14.2 SLUMP

The slump of shotcrete is normally measured in the same way as for conventionally cast concrete in accordance with AS 1012.3.1. The test apparatus must be placed on level ground and moistened not to the point of excess water before use. The shotcrete is placed in the test apparatus, consisting of a frustum of a cone, in three layers of equal height and each layer rodded with a designated steel rod 25 times before the succeeding layer is placed. After the final layer is rodded the top surface of the shotcrete is struck off and the cone is lifted vertically from the shotcrete. The time for lifting the cone should be 3 +/- 1 second. The extent to which the shotcrete subsides below the height of the cone after the cone is completely removed is measured the average of which is the “slump” of the shotcrete. The entire test from when the first concrete is placed into the cone should not exceed 3 minutes. The tolerance for slump shall be as per AS 1379, or project specific and agreed between stakeholders.

14.3 SPREAD

An alternative to slump as a measure of consistency is the measurement of Slump flow according to AS 1012.3.5. This test is better suited to highly flowable mixes with a slump of greater than 200 mm. This test involves the filling of a slump cone, which is then lifted and the spread of the flowable concrete is assessed in terms of the diameter of the resulting pool on a flat spread table. The flow characteristics of the concrete can also be measured in terms of the time taken to spread to 500 mm diameter (T_{500}), and the height difference between concrete on the inside of a ring of rebar obstacles and on the outside (J-ring test).

14.4 FLOW TABLE

The flow table test is similar to the spread test in that it involves measuring the diameter of a pool of concrete formed when it is released from a cone, but the EN 12350-5 flow table test differs in two ways from the AS 1012.3.5 test. Firstly, the cone is smaller so the amount of concrete involved in the test is reduced; and the flow table is raised and dropped 15 times in order to agitate the concrete and cause it to spread further than would occur solely in response to gravity. This test, therefore, measures the flow of the concrete in response to agitation more effectively than other tests.

14.5 COMPRESSIVE STRENGTH

The compressive strength of cast cylinders should be tested in accordance with AS 1012.9 using cylinder test specimens prepared in accordance with AS 1012.8. Cylinder test specimens are cast in two layers with each layer consolidated using a designated steel rod before the succeeding layer is cast. The upper free surface of the test cylinder should be screeded flat prior to covering with a lid to limit evaporation. Specimens should not be disturbed during initial hardening. The strength of shotcrete should be taken as the core strength multiplied by 1.15 and the L/D correction factor.

By convention, the strength of concrete at 28 days is normally taken to represent the long-term strength of this material. However, the 28-day strength may not be appropriate for all shotcreting applications. For example, if a certain minimum strength is required at a given early age, then strength should be measured at the same early age using an appropriate test method.

14.6 METHODS OF MEASURING EARLY-AGE COMPRESSIVE STRENGTH

14.6.1 General

Cast cylinders and cores are generally inappropriate to the measurement of compressive strength at ages earlier than 48 hours. Other methods of measuring the compressive strength of shotcrete by indirect means exist and should be used. A summary of the available early-age test methods is included below.

Measurement of early-age strength development is appropriate for assessment of the ability of shotcrete to support unstable ground and provides an indication of suitable re-entry times adjacent to freshly sprayed shotcrete. The most appropriate type of test to measure the early indirect-compressive strength up to 1 MPa is the Needle Penetrometer. The only effective means of assessing direct-compressive strength up to 8 MPa at early ages is the Beam-End Tester. The Soil Penetrometer provides an over-estimate of compressive strength, unless the results are corrected using the method by Bernard and Geltinger (2007) while the Hilti Gun requires a power-actuated tool operators' certificate to operate. Measurement of compressive strength at 1 day or later using Cores is appropriate for permanent applications provided they can be secured without damage. A minimum strength of about 10 MPa is recommended before cores can be extracted.

14.6.2 Soil Penetrometer

A soil penetrometer is a proprietary device consisting of a sprung flat-ended steel plunger calibrated to indicate the approximate compressive strength of the soil/concrete when forced into the surface a distance of about 6 mm (Figure 14.1). The device is used at approximately 6–10 locations across the surface of freshly-sprayed shotcrete at each age of testing, and readings are taken at 10–20 minute intervals until the required strength is achieved.

Although this test has the advantages that it is easy and inexpensive to perform, virtually non-destructive, and the test equipment can be readily carried around by operatives, an important disadvantage is that the device over-estimates compressive strength by a significant margin, and the results are strongly affected by the presence of aggregate and fibres. Estimating the correct depth of penetrometer can also be difficult on a rough surface.



Figure 14.1: *Soil penetrometer in use*

However, this test method is certainly superior to using a screw driver as a penetrometer to assess early-age strength and results are useful even without correction.

14.6.3 Needle Penetrometers

The needle penetrometer consists of a 3 mm diameter steel needle at the end of a spring that is forced into the surface of setting concrete. The force required to drive the needle to a depth of 15 mm is used to determine the approximate compressive strength with the aid of a calibration chart (Figure 14.2). This method is suitable for determining compressive strengths up to 1.0 MPa. This type of needle penetrometer should not be confused with Vicat needle penetrometers and other types of needle penetrometers that are widely used to assess setting times for conventionally cast concrete.

Advantages of the needle penetrometer are that it is a readily-portable device that is quick and easy to use. The disadvantage is that results are influenced by the presence of fibre and aggregate particles getting



Figure 14.2: *Needle penetrometer*

in the way of the needle, and the requirement to drive the needle steadily into the surface of the concrete is often difficult to achieve. Driving the needle into a drying shotcrete surface can also lead to over-estimates of strength, and use of the calibration chart is time-consuming. Various types of electronic penetrometer are also available that rely on the same principle of correlating depth of penetration into a concrete surface with strength development. These are available with electronic load measurement and depth estimation to simplify the process of assessment.

14.6.4 **Beam-End Tester**

The ASTM C116-based beam-end tester (Morgan, 1999) is the only early-age strength testing device that involves direct compressive failure of concrete samples. Beams measuring 75 x 75 x 400 mm are produced by spraying shotcrete into an open-ended mould (other sizes can be used if desired). The absence of ends helps to prevent rebound getting caught inside the beam mould. After spraying and cutting back to size, the beams are left to harden and can be extracted from the mould and tested when the strength exceeds about 0.5 MPa (as measured using the needle penetrometer). Portions of the beams are subjected to direct compression between the platens of the test device and the compressive strength is worked out on the basis of the area of the platens (Figure 14.3). About 3–4 tests can be obtained using each beam.

Extracting the beams from the mould can be difficult at early ages, so use of pressed metal inserts are recommended. The metal inserts sit in the mould during spraying and are then removed with the beam inside. The fresh concrete beam remains in the pressed metal insert (made using approximately 0.5 mm-thick steel sheet) until it is time to test, whereupon the mould is "peeled off" the beam like a wrapping. In most cases, the beam survives this process without breaking, even if it is only 20–30 minutes old.

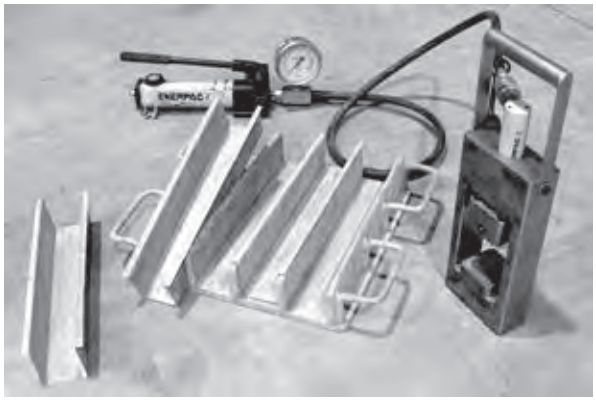

Figure 14.3: *Beam-end tester in use*

The beam-end tester has the advantage that a direct compressive strength estimate is obtained. For this reason, it is the preferred method of early-age compressive strength assessment. No calibration against other methods of measurement is necessary, indeed, the indirect methods are calibrated against data obtained using this test. The disadvantage of this method is that the beams are produced and stored separately from the lining, so that if a significant difference in temperature exists between concrete within the lining and ambient air then the rate of strength gain will be affected. Measures can be taken to ensure the results are relevant, for example, by storing the beams under cover immediately adjacent to the lining so that the heat of hydration from the lining keeps the beams warm. Another disadvantage of the beams is that rebound can be trapped in the mould and incorporated into the beam if spraying is not performed carefully.

14.6.5 **Hilti Gun-Test Method**

This method is suitable for shotcrete strengths between 2 and 18 MPa. A proprietary nail is shot into shotcrete using a Hilti DX 450 nail gun and the embedded length is recorded. A nut is screwed onto the protruding end of the nail and a pull tester is placed under the nut. As the nail is progressively extracted the maximum pull-load is recorded on the dial and converted into compressive strength as a function of the embedded nail length. To obtain a reliable result it is recommended that at least 8 nails be used for each test age.

The advantages of this method are that strengths in the range 2–18 MPa can be determined, and the strength measured is the actual in-situ strength between 20 and 50 mm through the thickness of a shotcrete lining. The disadvantages are the high cost of the equipment and fasteners, the fact that explosive cartridges are used, and the relatively long length of time required to conduct the measurements. Moreover, the guns do not always fire the fastener into the concrete correctly. The method also cannot be used for thin linings because of the depth of nail penetration required. For these reasons, Hilti Guns are seldom used in Australia.



Figure 14.4: *Hilti DX 450 nail gun*

14.7 FLEXURAL STRENGTH OF PLAIN SHOTCRETE

The flexural strength of plain shotcrete should be determined using beams sawn from panels or, for a base shotcrete mix, cast samples of shotcrete. If sprayed panels are not available then beams can be sawn from the in-place works but this is expensive, difficult, and normally not common practice. The preferred size of beam should be 100 x 100 x 350 mm or 150 x 150 x 600 mm extracted in accordance with ASTM C-1140 and tested in accordance with AS 1012.11 or ASTM C-78.

If the flexural strength of fibre-reinforced shotcrete is required, beams measuring 100 x 100 x 350 mm or 150 x 150 x 600 mm should be extracted in accordance with ASTM C-1140 and tested in accordance with EN 14561 or ASTM C-1609. Flexural strengths at first crack and in the post-crack range obtained using the EN 14651 beam tests are typically 15% higher than those obtained for a nominally identical FRS mixture tested using ASTM C1609. If the thickness of the in-place shotcrete is insufficient to allow 100-mm thick beams to be extracted, sawn beams measuring 75 x 125 x 600 mm can be cut from the works and tested in accordance with EN 14488-3. However, this test method results in very high levels of within-batch variability and should only be used when insufficient shotcrete thickness precludes the use of EN 14651 or ASTM C1609 beams. Cast samples of shotcrete can also be used with these beam sizes but the performance of such samples must not be taken to represent the performance of shotcrete as sprayed.

14.8 POST-CRACK PERFORMANCE TESTING

14.8.1 General

The term “Toughness Testing” is used generically to refer to a wide range of potential test methods, with there being many different types of beam and panel tests from different countries to choose from. However, the term has most commonly been taken to denote energy absorption in either beam or panel-based test methods, as opposed to residual strength measurement.

In Australia the most common post-crack performance test for quality control of fibre-reinforced shotcrete has become the ASTM C-1550 test using a 75 mm-thick x 800 mm-diameter round panel, or the EN 14651 notched beam test. These are the preferred test methods for post-crack performance testing in Australia. However, an alternative panel test is the 100 x 600 x 600 mm square panel produced and tested in accordance with EN 14488-5 (formerly EFNARC European Specification for Sprayed Concrete). An alternative beam test is the ASTM C1609 third-point loaded beam test using either 100 x 100 x 350 mm or 150 x 150 x 600 mm specimens.

Panels should be used whenever a relative measure of energy absorption is sufficient for design or quality-control purposes. The principal advantage of panels is the superior repeatability of energy-based post-crack performance measures derived from these tests compared to beams. The typical level of within-batch population variability for energy absorption derived using ASTM C-1550 round panels is about 13% and from EN 14488-5 square panels is about 18% (Bernard, 2002).

Beams are normally used when a direct estimate of the Modulus of Rupture and the residual flexural strength of fibre-reinforced shotcrete are required. EN 14651 beams have become the preferred beam test because post-crack performance is expressed as a function of maximum crack width, and the results are used in the *fib* Model Code 2010. The results generated using this test method display the same level of population variability (usually expressed as a Coefficient of Variation) as results generated using ASTM C1609 beam tests and average about 22–28%. EN 14488-3 beams are the only practical option for toughness testing when a sample is required to be extracted from works less than 100 mm thick. The EN 14488-3 beam

also has the advantage that it is more representative of thin shotcrete linings that are often close to 75 mm thick. However, the population CoV for these tests is well over 30%.

In choosing the most suitable test method to use for a project, the thickness of the specimen in comparison to the design thickness of the insitu lining should be considered. The appropriate test method should be selected by the engineer or geotechnical expert. Always use the latest version of these standards.

14.8.2 **Round-Panel Test Method – ASTM C1550**

In this test method a 75 mm thick x 800 mm diameter round panel test specimen which is simply supported on three pivots symmetrically arranged around its circumference, is loaded at its centre (Figure 14.5). The energy absorbed up to a specified central deflection, or load resistance exhibited at a specified deflection, is taken to represent the ability of a fibre-reinforced shotcrete to redistribute stress following cracking and therefore continue to offer structural support.

Selection of the most appropriate central deflection at which performance is specified depends on the intended application for the material. Performance at low levels of deformation are appropriate to serviceability requirements, while performance at large levels of deformation are appropriate to ultimate strength requirements such as unstable ground in mines. The energy absorbed up to 5 mm post-crack central deflection is applicable to situations in which the material is required to resist loads at low levels of deformation. Examples include: final linings in underground civil structures such as railway tunnels. The energy absorbed up to 40 mm deflection is more applicable to situations in which the material is expected to suffer severe deformation insitu, for example, shotcrete linings in mine drives and temporary linings in swelling ground.



Figure 14.5: *ASTM C-1550 round panel test in servo-controlled test rig*

The minimum number of ASTM C-1550 round panels comprising a set of specimens is two. It is recommended that a minimum of three be produced in case one of the specimens is damaged prior to testing. Round panels must be tested in a suitable servo-controlled test machine, such as the type shown in Figure 14.5, in order to comply with ASTM C-1550.

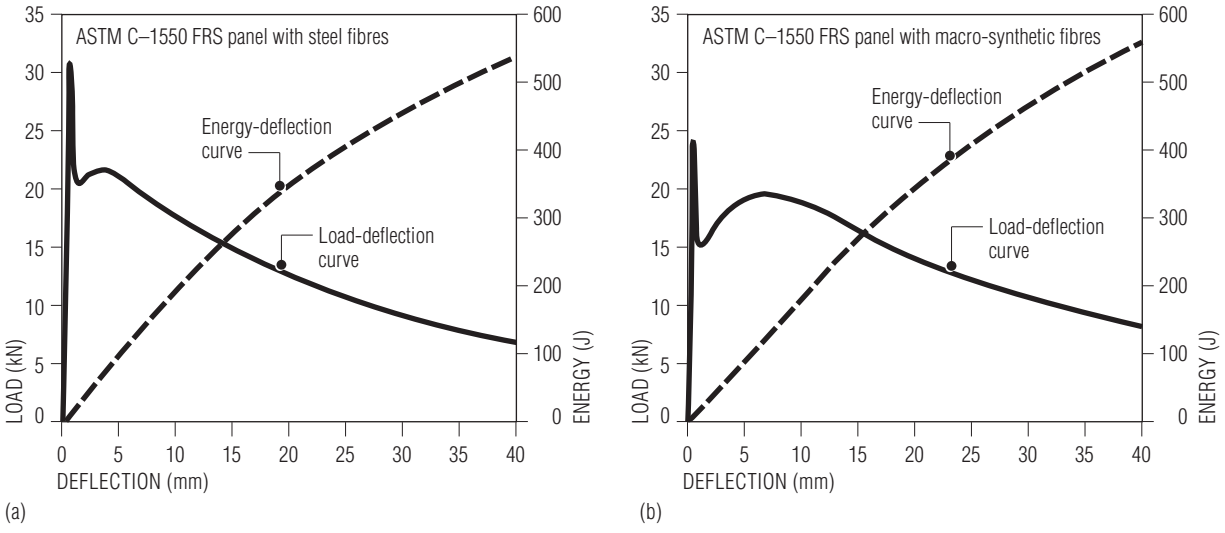

Figure 14.6: *Examples of load-deflection curves obtained from ASTM C-1550 round panels reinforced with (a) steel fibres and (b) macro-synthetic fibres*

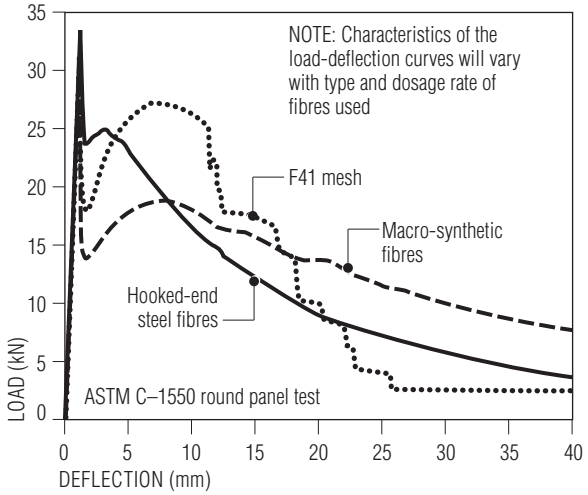

Figure 14.7: *Typical differences in load-deflection characteristics for shotcrete reinforced with steel mesh, steel fibres, and macro-synthetic fibres in ASTM C-1550 round panel test*

Performance is calculated as the energy (measured in Joules) under the load-deflection curve but can also be expressed as residual strength.

14.8.3 **Square-Panel Test Method – EN 14488-5**

This test involves a concrete panel measuring 600 x 600 x 100 mm thick, simply supported along all four edges while subjected a centre-point load (Figure 14.8). A load-deflection curve is obtained up to a central deflection of 25 mm. Performance is calculated as the energy (measured in Joules) under the load-deflection curve. EN 14488-5 panels are not commonly used in Australia as the specimens are larger and more expensive to produce, transport and handle on site and in the test laboratory than ASTM C1550 round panels.

Research has shown that, for typical fibre reinforced shotcrete mixes with toughness in the range 300–500 Joules (ASTM C-1550), the energy absorbed by a given mix in a square EN 14488-5 panel test at 25 mm central deflection is approximately 2.5 times the magnitude of energy absorbed by the same mix in the ASTM C-1550 at 40 mm central deflection (Bernard, 2002).

14.8.4 **Beam-Test Method – EN 14651**

The EN 14651 notched beam has become more popular in recent years, partly because the results of this test are commonly used in design according to the *fib* Model Code 2010 and Eurocode 4, and partly



Figure 14.8: *EN 14488 panel test using square test panel*

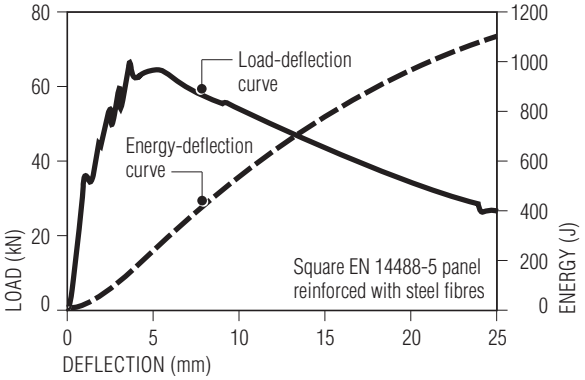

Figure 14.9: *Example of load-deflection curves obtained from square EN 14488-5 panels reinforced with steel fibres*

because it is easier to conduct than ASTM C1609/C1609M beam tests. A central point load is applied to a simply supported beam of 150 x 150 mm cross-section tested on a 500 mm span. A 25 mm deep notch is cut on the tensile face at the centre, ensuring that the crack occurs in this location. Performance is assessed in terms of crack width and load resistance, which can be converted into flexural strength using elastic engineering bending theory. A problem will occur if the FRS is deflection-hardening, because additional cracks may then arise outside of the notch. If this occurs, the test result is considered invalid. Moreover, the flexural strengths obtained using this test are always higher than results obtained using un-notched beams because of the way in which the crack propagates through the beam depth (Foster et al., 2013). The within-batch sample Coefficient of Variability is about 20–25% for residual flexural strength obtained using this test method.

It should be noted that the post-crack performance of FRS/FRC is strongly dependent on crack width due to the finite length of fibres. The

maximum crack width experienced in a member or test specimen will depend on the thickness of the section. For this reason, the apparent post-crack residual flexural strength of FRS will vary with the thickness of the specimen. If a lining design is based on residual flexural strength, it is therefore recommended that test specimens be selected such that their thickness is close to the thickness of the in situ lining.

Shotcrete beams tested according to any post-crack performance beam test shall not be sprayed as individual beams in moulds, they shall be cut from a much larger sprayed panel. However, a base shotcrete mix can be cast as part of initial laboratory trials.

14.8.5 **Beam-Test Method – ASTM C-1609/C1609M**

In this method a third-point loaded beam with dimensions of 100 x 100 x 350 mm (on a span of 300 mm) or 150 x 150 x 600 (on a span of 450 mm) is subjected to uni-axial bending (Figure 14.10). The load-deflection curve derived from this test can be used to determine the Modulus of Rupture representing the flexural strength of the concrete matrix and residual strengths or energy absorption representing the toughness of the fibre-reinforced shotcrete. The MOR and residual flexural strengths of a FRS mixture tested according to this method are normally about 15% lower in magnitude than for the same mixture tested according to EN 14651.

Beams are normally produced in sets of three or more; one set of specimens must comprise at least three beams. However, given the high degree of variation in post-crack performance for this type of specimen it is recommended that a minimum of 6 beams be tested in each set. Reported results are the first peak load and flexural strength, ultimate load and flexural strength and residual load and flexural strength values. Loads are reported in units of force (kN) and strengths are reported in units of stress (MPa). The rollers supporting the beam in this test method must comply with ASTM C1812, which ensures that a consistent Coefficient of Friction equal to 0.10 exists in the rollers. This helps to produce greater consistency in results between laboratories.

14.8.6 **Beam-Test Method – EN 14488-3 Beam**

The EN 14488-3 beam test involves third-point loading of a sawn shotcrete beam with dimensions of 75 x 125 x 600 mm on a span of 450 mm. The

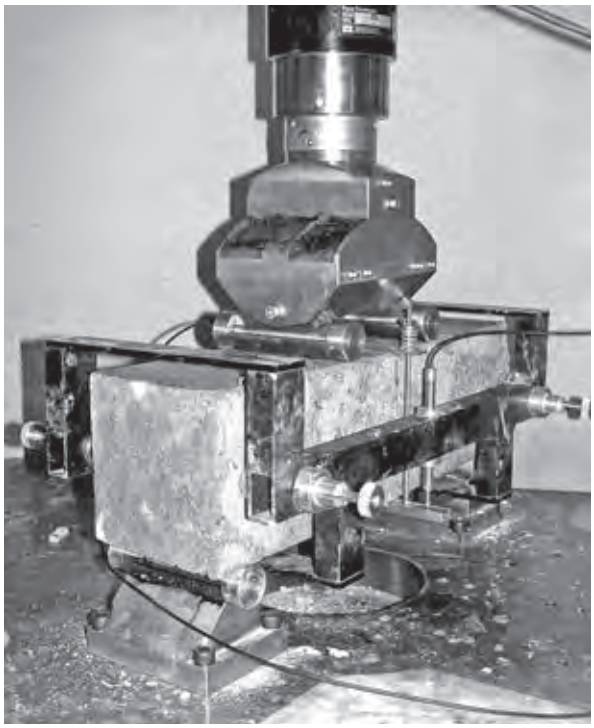

Figure 14.10: *ASTM C-1609 beam test in progress*

advantage of a reduced depth of specimen compared to other beam-test methods is that it results in a more flexible beam which is less demanding on the test machine. EN 14488.3 beams are seldom used for quality control because the population variability in results is too high to produce useful indicators of performance change (typically exceeding 30%).

14.8.7 **Double Punch Test**

The double-punch test involves the imposition of opposing compressive forces (in the form of small round surfaces) to the ends of a cylinder or core. It was first developed by Chen in 1970. The compressive forces cause the cylinder to split into sectors, and steadily move apart in almost direct tension as the two opposing compressive disks move toward the centre of the cylinder. This test has been investigated as a means of obtaining direct tensile residual strength for FRS/FRC, and several different versions of the test method exist (including the so-called Barcelona test). This test method may be useful for obtaining a rough estimate of residual tensile strength of FRS obtained from cores, but there continue to exist problems in interpreting the results.

14.9 DENSITY

The density of hardened shotcrete should be determined in accordance with AS 1012.12. The density of wet shotcrete should be determined in accordance with AS 1012.5. Shotcrete should never be sprayed into the sample vessel for this test, instead a sample of cast shotcrete should be used.

14.10 DRYING SHRINKAGE

The unrestrained drying shrinkage of cast shotcrete specimens should be measured in accordance with AS 1012.13. The unrestrained drying shrinkage of cast shotcrete beams is related to the drying shrinkage suffered by in-place shotcrete on a rigid substrate but the relation between these two forms of shrinkage is complex and difficult to predict. Set accelerated shotcrete can be sprayed into the moulds used for AS 1012.13 but this is difficult and care should be taken to limit the amount of rebound incorporated into the specimens. Multiple extra specimens should be produced to allow for a high degree of rejects.

When using AS 1012.13 to assess the drying shrinkage of shotcrete, it is recommended that the 7-day immersed curing period prior to shrinkage measurement be omitted as most in situ shotcrete does not enjoy the advantage of 7 days of wet curing. It should also be noted that a considerable amount of autogenous shrinkage can occur in shotcrete over the first 24 hours and that this form of shrinkage is not included in test results according to AS 1012.13. In practice, measurement of shrinkage over the first 24 hours after spraying is very difficult. For this reason, sprayed shotcrete specimens should be cured for 24 hours in a moist environment, after which they can stripped and drying shrinkage measurements can start. The present AS 1012.13 method based on unrestrained beamlets suffers a number of problems in relation to both the practical difficulty of spraying set accelerated shotcrete into the moulds and applying unrestrained drying shrinkage results in design. Alternative restrained specimens similar to the type used in ASTM C1579 may be more applicable to shotcrete sprayed on a rigid substrate, as performance is assessed in terms of time-dependent crack width development over a central crack initiator. This is an area of performance assessment that requires improvement for the future.

14.11 CREEP

The creep of cast shotcrete in compression should be determined by conducting tests on cylinders in accordance with AS 1012.16. Creep tests in compression can also be conducted on shotcrete cores once the ends have been suitably cut and ground. The AS 1012.16 test involves a cylindrical specimen subjected to continuous compression that suffers drying shrinkage strains in addition to creep strains. The contribution of drying shrinkage to the total measured strain in a creep specimen can be determined by conducting shrinkage tests on nominally identical shotcrete specimens (cast or sprayed) in accordance with AS 1012.13. The creep of shotcrete in compression is most relevant to in-place shotcrete loaded in compression and is only weakly related to the creep behaviour of in-place shotcrete loaded in flexure. Moreover, the post-crack creep behaviour of fibre-reinforced shotcrete subject to bending is not necessarily related to the creep behaviour of fibre-reinforced shotcrete in compression. The creep of shotcrete at early ages has been found to be very high but this is difficult to measure in compression due to the challenge of producing cores at early ages. Alternative test methods based on flexure of panels may be more appropriate at early ages.

14.12 COEFFICIENT OF THERMAL EXPANSION

A method of determining the linear coefficient of thermal expansion of oven-dry “chemical resistant” mortar is given in ASTM C 531 and of saturated concrete in US Corps of Engineers Standard CRD-C 39. AASHTO Test Method TP 60 can also be used for cores extracted from in-place shotcrete.

14.13 ALKALI-SILICA REACTIVITY (ASR)

Standards Australia HB79 should be consulted for information regarding ASR and suitable tests to use with proposed combinations of aggregates and cements. In terms of testing, tests should be conducted according to AS 1141.60.1 AMBT, and AS 1141.60.2 CPT.

14.14 SOLUBLE SALTS

Sulphate and chloride-ion contents should be determined by testing of hardened concrete and concrete aggregates in accordance with AS 1012.20 and AS 1141. Recommended limits and testing

requirements for acid-soluble sulphate-ion content of hardened concrete may be obtained from AS 1379, RMS B82 Clause 2.7, AS 1012.20.1 for acid soluble salts, and AS 1012.20.2 water soluble salts. The default test is for acid soluble salts because this assesses the total soluble salt content. The sulphate resistance of cementitious mortars can be assessed using AS 2350.14, which involves mixing a selected cementitious mixture to produce a mortar that is then used to cast small beams subject to exposure in a sulphate solution.

The penetration of chloride ions through hardened cementitious materials is the focus of a great deal of interest in relation to long-term durability of shotcrete and cast concrete structures. Several different tests are available to assess the propensity for chloride ions to pass through hardened concrete. Some are based on diffusion and involve long periods of exposure to chloride-rich solutions (Nordtest 443), while others involve the non-steady state measurement of charge or chloride ion passage through hardened concrete with the assistance of an applied voltage (Nordtest 492, ASTM 1202, ASHTTO RCPT). The rapid chloride penetration tests present the advantage of quick testing duration, but numerous authors have questioned the validity of the results. Long-term diffusion-based testing appears to be a more valid reflection of the ability of a hardened mixture to resist chloride ion penetration. However, all these tests ignore the very substantial effect of cracks on chloride ion migration through a shotcrete or concrete member.

Resistance to strong acids may be a requirement for shotcrete in deep mining and tunnelling applications, particularly when volcanic sulphides are present in the ground. Exposure to air and water can cause these sulphides to react and form sulfuric acid, which can strongly attack and damage shotcrete structures. Acid resistance is not commonly assessed but comparative assessment can be instigated by exposure to measured quantities of high molar acid (most commonly sulfuric acid) through ponding or agitation.

14.15 WATER PENETRATION THROUGH BULK SHOTCRETE

Water penetration depth can be determined in accordance with EN 12390-8 (previously known as DIN 1048 Part 5). This test involves the extraction of a 100 mm or 150 mm diameter core of shotcrete which is sawn to reveal a flat face perpendicular to the direction of drilling. Water is applied under pressure to the flat-sawn surface for a period of 3 days after which the depth of water penetration is determined by breaking the core diametrically and applying “methyl blue” that reveals the penetration depth. The results of this test can be seriously compromised by the presence of cracks in the sample which may be caused by shrinkage, sloughing after spraying, or coring. Resistance to bulk water penetration can also be assessed using AS 1012.21 Boiled Absorption Test, as this is purported to be a measure of the degree of compaction in shotcrete. Similarly, the results of the RMS T362 Sorptivity Test are believed to represent the resistance of a mixture to water penetration at the surface and may be broadly related to compaction and permeability.

14.16 BOND STRENGTH (ADHESION)

Adhesion is a very difficult property to measure. All the existing test methods involve proprietary equipment for the extraction of a core from in-place shotcrete. The strength of adhesion between the shotcrete and the underlying substrate can be determined in accordance with Section 10.6 of the EFNARC European Specification for Sprayed Concrete. An alternative test, for the determination of adhesive strength, is Swedish Standard SS 137243.

The EFNARC method involves extraction of a core in direct tension from a single core hole (Figure 14.11) while the Swedish Standard 137243 method involves the generation of concentric core holes and use of an extraction device that ensures concentric loading (Figure 14.12). Debonding of shotcrete from the substrate can also be revealed by drumminess of the shotcrete lining in response to simple hammer soundings.

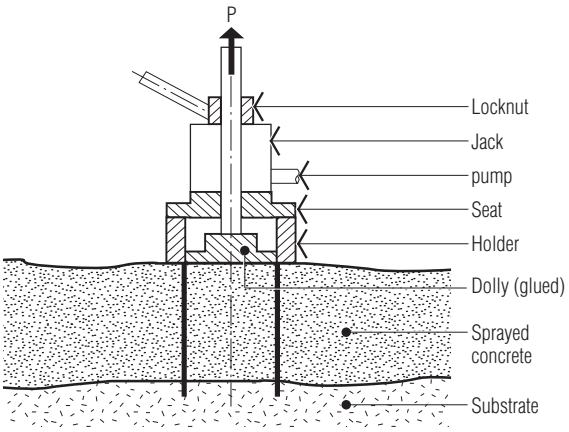

Figure 14.11: *Pertinent features of EFNARC Bond test apparatus*

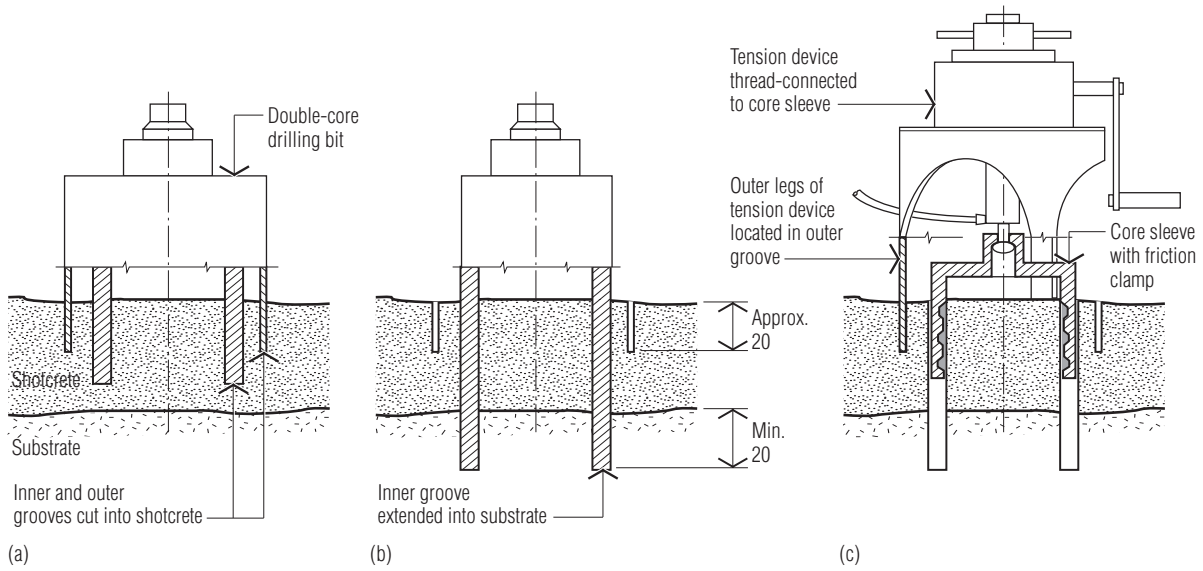

Figure 14.12: *Process of conducting bond test using Swedish Standard 137243*

The Swedish Standard 137243 uses a similar method of producing the core, but a double-coring drill bit cuts two grooves with the inner core extending past the shotcrete into the substrate. A specially designed tension device is then located over the inner core, with outer legs located in outer groove. The central core is then extracted and the peak-tensile load used to determine the bond strength. This method has the advantage that minimal moments are applied to the core during extraction, hence the result is more representative of the true bond strength of the shotcrete.

14.17 FREEZE/THAW RESISTANCE

The freeze-thaw resistance of hardened shotcrete should be determined in accordance with ASTM C-666. If the shotcrete surface is expected to suffer salt exposure in addition to freeze-thaw action, then the resistance of the material should be assessed using ASTM C-672. If air entrainment is included with the shotcrete both wet- and dry-mix will typically satisfy freeze-thaw testing without difficulty. However, if the aggregates or any other mix component is suspected of being non-resistant to freezing, then ASTM C-666 should be used. Note that freeze-thaw resistance is only an issue if the shotcrete is expected to be saturated in place and then frozen.

Shotcrete surfaces tend to suffer more deterioration due to salt damage than cast concrete when using ASTM C-672 because of the quality of the finish (vertical surfaces as opposed to flat work). This test is most suitable for road-side shotcrete and industrial applications when shotcrete is the final exposed surface. If set accelerator is used the ASTM C-666 freeze-thaw test is essential for freezing conditions. This test is very effective in distinguishing freeze-thaw resistant from inferior shotcrete subject to set accelerator over-dose.

14.18 DETERMINATION OF FIBRE CONTENT

There are two alternative methods of determining the fibre content of shotcrete: RMS B82 Method, and the EN 14488 Method. These methods are only applicable to the determination of fibre content for steel fibres and macro-synthetics; they are not appropriate for micro-synthetic fibres. Due to the small sample sizes used, both tests are highly unreliable as the fibre counts obtained have been found to be weakly related to both the dosage rate of fibres added to the concrete and the performance achieved.

RMS B82 Method

Determination of fibre content of wet shotcrete should be based on a wet sample taken from the mixer of a known volume not less than 6 litres. The sample should be washed and the fibre content separated, dried, and weighed with results reported to the nearest 2 grams. The result is reported as the weight of fibres per cubic metre of shotcrete. The results of this method are highly variable and it is recommended that a volume of concrete much greater than 6 litres be used.

EN14488 Fibre content of fibre reinforced concrete

Determination of fibre content of hardened shotcrete can be undertaken in accordance with Part 7 of EN 14488. This section involves two possible test methods: one involves the washing out of fibres from wet concrete, while the other involves extraction of cores from the shotcrete under investigation, determination of the volume of the cores, followed by crushing and separation of the fibres. The weight of fibres separated from the shotcrete is divided by the volume of the sample/cores to determine the dosage rate of fibres in kg/m^3. The core-based method is subject to very high variability and is therefore only recommended when no alternative is available. Fibre counting can also be undertaken for cracked toughness specimens but the variability in counts is very high and the relation to performance is weak.

15

References

AFTES (2000) *Recommendation for the Design of Sprayed Concrete in Underground Support,* Association Francaise des Tunnels et de l'Espace Souterrain.

American Concrete Institute (1978) Special Publication Number 57, *Refractory Concrete*, pp. 314, ACI Farmington Hills, USA.

Australian Buildings Codes Board (2019) *National Construction Code.*

Austroads (2019) *Guide to Road Tunnels,* Part 2, Rev. 3.

Barrett, S.V.L. & McCreath, D.R. (1995) "Shotcrete Support Design in Blocky Ground: Towards a Deterministic Approach", *Tunnelling and Underground Space Technology,* Vol. 10, No. 1, pp. 79–89.

Barton, N.R. (1996) "Investigation, Design and Support of Major Road Tunnels in Jointed Rock Using NMT Principles", IX Australian Tunnelling Conference, Sydney

Barton, N.R. & Grimstad, E. (1994) *The Q-system Following Twenty Years of Application in NMT Support Selection,* Geomechanik.

Barton, N.R., Lien, R. & Lunde, J. (1974) "Engineering Classification of Rock Masses for the Design of Tunnel Support", *Rock Mechanics,* Vol. 6, pp. 186–236.

Beaupré, D. (1994) *Rheology of High Performance Shotcrete,* Civil Engineering Department, University of British Columbia, Canada, Ph.D. Thesis, pp. 250.

Beaupré, D., Jolin, M., Pigeon, M. and Lacombe, P. (2001) "Recent developments in the field of shotcrete: the Quebec Experience", S*hotcrete: Engineering Developments,* Balkema, Lisse, The Netherlands.

Bernard, E.S. (2000) "Behaviour of round steel fibre reinforced concrete panels under point loads", *Materials and Structures,* RILEM, Vol. 33, April, pp. 181–188.

Bernard, E.S. (2002) "Correlations in the behaviour of fibre reinforced shotcrete beam and panel specimens", *Materials and Structures,* RILEM, Vol. 35, April, pp. 156–164.

Bernard, E.S. (2004a) "Creep of cracked fibre-reinforced shotcrete panels", *Shotcrete: More Engineering Developments,* Bernard (ed.), pp. 47–58, Taylor & Francis, London.

Bernard, E.S. (2004b) "Design performance requirements for fibre-reinforced shotcrete using ASTM C-1550", *Shotcrete: More Engineering Developments,* Bernard (ed.), pp. 67–80, Taylor & Francis, London.

Bernard, E.S. (2008) "Early-age load resistance of fibre reinforced shotcrete linings", *Tunnelling and Underground Space Technology,* 23, pp. 451–460.

Bernard, E.S. (2011) "Influence of Geometric Factors on the Load Capacity of Early-age Fibre Reinforced Shotcrete Linings", *Tunnelling and Underground Space Technology,* Vol. 26, No. 4, pp. 541–547.

Bernard, E.S. (2020) "Changes in Long-term Performance of Fibre Reinforced Shotcrete due to Corrosion and Embrittlement", *Tunnelling and Underground Space Technology,* 98, 103335.

Bernard, E.S. & Geltinger, C. (2007) "Determination of Early-Age Compressive Strength for Shotcrete", *Shotcrete,* Vol. 9, No. 4, pp. 22–27.

Bernard, E.S. & Thomas, A.H. (2020) "Fibre reinforced sprayed concrete for ground support", *Tunnelling and Underground Space Technology,* 98, 103302.

Bieniawski, Z.T. (1973) "Engineering Classification of jointed rock masses", In *Transactions of the South African institution of Civil Engineers,* 15, pp. 335–344.

Bieniawski, Z.T. (1976) "Rock mass classification in rock engineering". *Proc. of Symposium on Exploration for Rock Engineering,* Johannesburg, Vol. 1, pp. 97–106.

Bieniawski, Z.T. (1989) "Engineering Rock Mass Classifications: A Complete Manual for Engineers and Geologists in Mining", *Civil and Petroleum Engineering.* 251p. New York, NY: Wiley.

Bischoff, J.A. & Smart, J.D. (1977) “A Method of Computing a Rock Reinforcement System which is Structurally Equivalent to an Internal Support System”, *Proc. 16th Symposium on Rock Mechanics & Design Methods in Rock Mechanics.*

Brady, B.H.G. & Brown E.T. (1985) *Rock Mechanics for Underground Mining,* George Allen & Unwin, London.

British Tunnelling Society (2010) *Specification for Tunnelling,* Third Edition, pp. 200, Thomas Telford, London.

Brown, E.T. (2004) “The dynamic environment of ground support and reinforcement”, *Proc. 5th Int. Symp. on Ground Support in Mining and Underground Construction,* E. Villaescusa & Y. Potvin (eds.), Taylor & Francis, London, pp. 3–16.

Browne, R.D. & Bamforth, P.B. (1977) “Tests to Establish Concrete Pumpability”, *ACI Journal,* Vol. 74, No. 5, May, pp. 193–207.

CCS-4 (2008) *Shotcrete for the Craftsman,* American Concrete Institute.

CP-60 (2009) *Craftsman Workbook for ACI Certification of Shotcrete Nozzleman*, American Concrete Institute.

Chen, W.F. (1970) “Double punch test for tensile strength of concrete”, *ACI Journal of Materials,* American Concrete Institute, Vol. 67, No. 2, pp. 993–995.

Clements, M.J.K., Jenkins, P.A. and Malmgren, L. (2004) “Hydroscaling – An overview of a young technology”, *Shotcrete: More Engineering Developments,* Bernard (ed.), pp. 89–96, Taylor & Francis, London.

Diederichs, M.S. & Kaiser, P.K. (1999) “Stability Guidelines for Excavations in Laminated Ground – The Voussoir Analogue Revisited”, *Int. J. Rock Mech. & Min. Sci.*; 36, pp. 97–118.

Du, L. & Folliard, K.J. (2005) “Mechanisms of Air Entrainment in Concrete”, *Cement and Concrete Research,* Vol. 35, Issue 8, pp. 1463–1471.

Duddeck, H. & Erdmann, J. (1982) “Structural design models for tunnels”. *Proceedings, Tunnelling 82*, London, pp. 83–91.

Dyer, R.M. (1991) “An Investigation of Concrete Pumping Pressure and the Effects of Pressure on the Air-Void System of Concrete”, Masters Thesis, University of Washington, pp. 223.

European Specification for Sprayed Concrete 1996, European Federation of National Associations of Specialist Contractors and Material Suppliers for the Construction Industry (EFNARC).

Foster, S.J, Htut, T.N.S. and Ng, T.S. (2013) “High Performance Fibre Reinforced Concrete: Fundamental Behaviour and Modelling”. *Proc. of 8th International Conf. on Fracture Mechanics Concrete and Concrete Structures* (FraMCoS-8), Toledo, Spain, pp. 69–78.

Gray, J. (1962) “Laboratory procedure for comparing pumpability of concrete mixtures”, Sixty-fifth annual meeting of National Crushed Stone Assn., Washington, D.C., June 24–29, pp. 964–971.

Grimstad, E. & Barton, N. (1993) “Updating the Q System for NMT”, *Proceedings of International Symposium on Sprayed Concrete.* Fagernes, Norway, pp. 21.

Grimstad, E., Kankes, K., Bhasin, R., Magnussen, A.W. and Kaynia, A. (2002) “Rock mass quality Q used in designing reinforced ribs of sprayed concrete and energy absorption”, Report, Norwegian Geotechnical Institute.

Hadjigeorgiou, J. & Karampinos, E. (2017) “Design tools for squeezing ground conditions in hard rock mines”, in J. Wesseloo (ed.), *Proceedings of the Eighth International Conference on Deep and High Stress Mining,* Australian Centre for Geomechanics, Perth, pp. 693-705.

Hahn, T. & Holmgren, J. (1979) “Adhesion of shotcrete to various types of rock surfaces and its influence on the strengthening function of shotcrete when applied on hard jointed rock”, *Proceedings, 4th International Congress on Rock Mechanics,* International Society for Rock Mechanics, Montreux, Switzerland, Vol. 1, pp. 431–440.

Hashash, Hook, Schmidt & Yao (2001) “Seismic Design and analysis of underground structures”, *Tunnelling and Underground Space Technology,* 16, pp. 247–293.

Hoek, E. (2007) *Practical Rock Engineering,* e-notes, www.rocscience.com/learning/hoeks-corner

Hoek, E. & Brown, E.T. (1980) *Underground Excavations in Rock,* Institution of Mining and Metallurgy.

Hoek, E., Carranza-Torres, C., Diederichs, M. and Corkum, B. (2008) “Integration of geotechnical and structural design in tunneling”, *Proceedings University of Minnesota 56th Annual Geotechnical Engineering Conference,* Minneapolis, 29 Feb, pp. 1–53.

“Hydraulic Cements” T41, Cement Concrete & Aggregates Australia, Sydney.

ICE Design and Practice Guides (1996) *Sprayed Concrete Linings (NATM) for Tunnels in Soft Ground,* Institution of Civil Engineers, London.

ITA (2017) Report No.18 – *Structural Fire Protection for Road Tunnels.*

ITIG (2012) “A Code of Practice for Risk Management of Tunnelling Works”, International Tunnel Insurance Group, 2nd edition, May 2012.

Jaramillo (2017) “Impact of seismic design on tunnels in rock – Case histories”, *Underground Space Journal,* Vol. 2. pp. 106–114.

Johansen, K.W. (1972) *Yield Line Theory,* Cement and Concrete Association, U.K.

Jolin, M. & Beaupré, D. (2000) “Temporary high initial air content wet process”. *Shotcrete,* Vol. 2, No. 1, pp. 32–34

Jolin, M., Burns, D., Bissonnette, B., Gagnon, F. and Bolduc, L-S. (2009) “Understanding the pumpability of concrete”, *Shotcrete for Underground Support XI,* Davos, Switzerland, June 8–10.

Jones, L.L. & Wood, R.H. (1967) *Yield Line Analysis of Slabs,* Elsevier.

John, M. & Mattle, B. (2003) “Shotcrete Lining Design: Factors of Influence”, *RETC Proceedings,* pp. 726–734.

Kaiser, P.K. & Cai, M. (2013) “Critical review of design principles for rock support in burst-prone ground – time to rethink!”, in Y. Potvin & B. Brady (eds.), *Proceedings of the Seventh International Symposium on Ground Support in Mining and Underground Construction,* Australian Centre for Geomechanics, Perth, pp. 3–37.

Lancaster-Jones, P.F.F. (1975) “The interpretation of the Lugeon water-test”, *Quarterly Journal of Engineering Geology and Hydrogeology,* 8(2), pp. 151–154.

McKay, J. & Trottier, J-F. (2004) “Post-crack creep behaviour of steel and synthetic FRC under flexural loading”, *Shotcrete: More Engineering Developments,* Bernard (ed.), pp. 183–192, Taylor & Francis, London.

Milne, D., Hadjigeorgiou, J. and Pakalnis, R. (1998) “Rock Mass Characterization for Underground Hard Rock Mines” *Tunnelling and Underground Space Technology,* Vol. 13, No. 4, pp. 393–391.

Model Code 2010 (2012), *fib*, Lausanne.

Morgan, D.R., McAskill, N. and Heere, R. (1999) “Determination of Early-Age Compressive Strength of Shotcrete”, *3rd International Symposium on Sprayed Concrete,* Gol, Norway, September 26-29, pp. 347–357.

Morissette, P., Hadjigeorgiou, J., Punkkinen, A.R. and Chinnasane, D.R. (2014) “The influence of change in mining and ground support practice on the frequency and severity of rockbursts”, in M. Hudyma & Y. Potvin (eds.), *Proceedings of the Seventh International Conference on Deep and High Stress Mining,* Australian Centre for Geomechanics, Perth, pp. 165–177.

Neville, A.M. (2002) *Properties of Concrete,* Longman, London.

NGI (2002) “Using the Q-System, Rock mass classification and support design” NGI, Oslo.

Nordström, E. (2016) “Evaluation after 17 years with field exposures of cracked steel fibre reinforced shotcrete”, BeFo Rapport 153, Rock Engineering Research Foundation, Stockholm.

NZTA (2016) *Bridge Manual,* New Zealand Transport Agency, Wellington.

ÖBV (2013) *Guideline – Sprayed Concrete,* April 2013 Edition, published by Österreichische Bautechnik Vereinigung, Vienna.

Palmstrom, A. & Broch, E. (2006) “Use and misuse of rock mass classification systems with particular reference to the Q-system”, article in *Tunnelling and Underground Space Technology,* November 2006.

PIARC (2004) *Design Criteria for Resistance to Fire for Road Tunnel Structures.*

Pells, P.J.N. (2002) “Developments in the design of tunnels and caverns in the Triassic rocks of the Sydney region”, *International Journal of Rock Mechanics and Mining Sciences,* 39, Pergamon.

Pigeon, M., Marchand, J. & Pleau, R. (1996) “Frost Resistant Concrete”, *Construction and Building Materials,* Vol. 10, No. 5, pp. 339–348.

Potvin, Y. & Hadjigeorgiou, J. (2015) “Empirical ground support design of mine drives”, in *Underground Design Methods Conference 2015,* Australian Centre for Geomechanics, Perth, Australia.

Potvin, Y. & Hadjigeorgiou, J. (2020) “Ground Support for underground mines”, Australian Centre for Geomechanics, Perth.

Proctor, R.Y. & White T.L. (1977) “Earth Tunneling with Steel Supports”, Youngstown, Ohio: Commercial Shearing and Stamping Company.

Punkkinen, A.R. & Mamidi, N.R. (2010) “Effective ground support system design to manage seismic hazard in a high stress diminishing pillar at a Vale mine”, in Y. Potvin & M. Van Sint Jan (eds.), *Proceedings of the Fifth International Seminar on Deep and High Stress Mining,* Australian Centre for Geomechanics, Perth, pp. 367–381.

Raffaldi, M.J., Martin, L.A., Benton, D.J., Sunderman, C.B., Stepan, M.A. and Powers, M.J. (2017) “Quasi-static and mechanical shock testing of reinforced shotcrete surface support”, in J. Wesseloo (ed.), *Proceedings of the Eighth International Conference on Deep and High Stress Mining,* Australian Centre for Geomechanics, Perth, pp. 733–746.

Reid, S.G. & Bernard, E.S. (2020) “The Influence of In-plane Restraint on the Point Load Resistance of Fibre Reinforced Shotcrete”, *Structural Concrete, fib* (submitted).

RILEM (2002) TC162-TDF “Sigma–Epsilon design method – final recommendation”, Reunion Internationale des Laboratoires et Experts des Materiaux, Systemes de Construction et Ouvrages – International Union of Laboratories and Experts in Construction Materials, Systems and Structures.

RILEM (2003) TC162-TDF “Test and design methods for steel fibre reinforced concrete”, *Materials & Structures,* Vol. 36, Oct, pp. 560–567.

RMS B82 *Shotcrete Work,* Roads & Maritime Services of New South Wales, Sydney.

Safework Australia (2018) Safe design of structures – Code of Practice.

Schweiger, H.F., Paternesi, A. and Tschuchnigg, F. (2017) “Eurocode 7-based design of SCL tunnels by means of numerical analyses”, *Geotechnique* 67, No. 9, pp. 837-844.

Simser (2014) “Empirical experience with shotcrete in deep underground mines”, WSN Mining Health and Safety Conference 2014.

Sjolander, A. (2017) “Analyses of shotcrete stress states due to varying lining thickness and irregular rock surfaces”, thesis published by KTH Royal Institute of Technology, Stockholm, Sweden, April 2017.

Terzaghi, K. (1946) “Rock defects and loads in tunnel supports”, *Rock Tunnelling with Steel Supports,* R.V. Proctor & T.L. White, (eds.) The Commercial Shearing and Stamping Co., Youngstown, Ohio, pp. 17–99.

Trujillo, P.B. & Jolin, M. (2018) “Encapsulation Quality of Reinforcement: From Laboratory Tests to Structural Design Guidelines”, *Eighth International Symposium on Sprayed Concrete,* Trondheim, Norway, 11-14 June, pp. 54–68.

Villaescusa, E., Player, J. R. and Thompson, A. G. (2014) “A reinforcement design methodology for highly stressed rock masses”. Paper presented at the ISRM International Symposium – 8th Asian Rock Mechanics Symposium.

Windsor, C.R. (2004) “Shotcrete Rock Support in Australian Mines: Curing and Thickness”, *Surface Support in Mining,* Australian Centre for Geomechanics.

Wittke, W., Feiser, J. and Kreiger, J. (1986) “Stability Analysis of an Advanced Vault Excavation with Unlined Invert According to the Finite Element Method”, *International Journal for Numerical and Analytical Methods in Geomechanics,* Vol. 10, pp. 259–281.

Yoggy, G. (2000) “The History of Shotcrete”, *Shotcrete,* American Shotcrete Ass., Vol. 2, No. 4, pp. 28–29.

Australian Standards

AS 1012 [set] *Methods of testing concrete,* Standards Australia.

AS 1141 [set] *Methods of sampling and testing aggregates,* Standards Australia.

AS1170 (2007) *Structural Design Actions,* Standards Australia.

AS 1379 *Specification and supply of concrete,* Standards Australia.

AS 1478 [set] *Chemical admixtures for concrete, mortar and grout,* Standards Australia.

AS 1530.4 (2014) *Elements Fire Resistance Test,* Standards Australia.

AS 2350.14 (2016) *Methods of testing portland, blended and masonry cements: Length change of cement mortars exposed to sulfate solution,* Standards Australia.

AS 2758 [set] *Aggregates and rock for engineering purposes,* Standards Australia.

AS 2783 *Use of reinforced concrete for small swimming pools,* Standards Australia.

AS 3582 [set] *Supplementary cementitious materials for use with portland and blended cement,* Standards Australia.

AS 3600 *Concrete structures,* Standards Australia.

AS 3735 *Concrete structures retaining liquids,* Standards Australia.

AS 3799 *Liquid membrane-forming curing compounds for concrete,* Standards Australia.

AS 3972 *Portland and blended cements,* Standards Australia.

AS 5100 (2018) *Bridge Design,* Standards Australia.

AS/NZS 4671 *Steel reinforcing materials,* Standards Australia.

AS/NZS-ISO9001 *Quality Management Systems,* Standards Australia.

RMS T362 (2012) "Interim test for verification of curing regime – Sorptivity", Roads and Maritime Service of NSW.

International Standards

AASHTO Test Method TP60, "Standard Specifications for Transportation and Methods of Sampling and Testing" AASHTO, Washington, 2006.

AASHTO T277 (2018) "Standard Method of Test for Rapid Determination of the Chloride Permeability of Concrete", American Association of State Highway and Transportation Officials, Washington, D.C.

ACI 506R *Guide to Shotcrete,* American Concrete Institute, Farmington Hills, USA.

ACI 547R *Refractory Concrete,* American Concrete Institute, Farmington Hills, USA.

ASTM International, Standard A820/A820M, "Standard Specification for Steel Fibers for Fiber-Reinforced Concrete", ASTM, West Conshohocken

ASTM International, Standard C1116/C1116M, "Standard Specification for Fiber-Reinforced Concrete", ASTM, West Conshohocken.

ASTM Standard Test method C-78 "Flexural Strength of Concrete (Using Simple Beam with Third-point Loading)", ASTM International, USA.

ASTM Standard Test method C-116, "Compressive Strength of Concrete Using Portions of Beams Broken in Flexure", ASTM International, USA.

ASTM Standard Guide C-295, "Petrographic Examination of Aggregates for Concrete", ASTM International, USA.

ASTM Standard Test method C-531, "Linear Shrinkage and Coefficient of Thermal Expansion of Chemical- Resistant Mortars, Grouts, Monolithic Surfacings, and Polymer Concretes", ASTM International, USA.

ASTM Standard Test method C-642 "Density, Absorption, and Voids in Hardened Concrete", ASTM International, USA.

ASTM Standard Test method C-666, "Resistance of Concrete to Rapid Freezing and Thawing", ASTM International, USA.

ASTM Standard Test method C-672, "Scaling Resistance of Concrete Surfaces Exposed to Deicing Chemicals", ASTM International, USA.

ASTM Standard Practice C-1140, "Preparing and Testing Specimens from Shotcrete Test Panels", ASTM International, USA.

ASTM 1202 (2019) *Standard Test Method for Electrical Indication of Concrete's Ability to Resist Chloride Ion Penetration,* ASTM, West Conshohocken.

ASTM Standard Test method C-1550, "Flexural Toughness of Fiber-Reinforced Concrete (Using Centrally Loaded Round Panel)", ASTM International, USA.

ASTM Standard Test method C-1609, "Flexural Performance of Fiber-Reinforced Concrete (Using Beam With Third-point Loading)", ASTM International, USA.

ASTM C1812/C1812M (2015) *Standard Practice for Design of Journal Bearing Supports to be Used in Fiber Reinforced Concrete Beam Tests,* ASTM, West Conshohocken.

ASTM D570 (2018) *Standard Test Method for Water Absorption of Plastics,* ASTM, West Conshohocken.

Concrete Society TR63 (2007) *Guidance for the design of steel-fibre-reinforced concrete,* The Concrete Society, Slough.

Concrete Society TR65 (2007) *Guidance on the use of macro-synthetic fibre reinforced concrete,* The Concrete Society, Slough.

DBV 2001 *Design Principles of Steel Fibre Reinforced Concrete for Tunnelling Works,* Deutscher Beton-Verein.

DIN 1048-5 (1991) *Testing concrete; testing of hardened concrete (specimens prepared in mould),* DIN.

EN 12390 (2019) "Testing hardened concrete – Part 8: Depth of penetration of water under pressure", European Committee for Standardisation.

EN 1542 (1999) *"Products and systems for the protection and repair of concrete structures. Test methods. Measurement of bond strength by pull-off",* European Committee for Standardisation.

EN 12350 (2019) "Testing fresh concrete: Part 5 – Flow table test", European Committee for Standardisation.

EN 14488 *Testing Sprayed Concrete,* European Standard (Euronorm) European Committee for Standardisation.

EN 14651 (2007) "Test method for metallic fibre concrete. Measuring the flexural tensile strength (limit of proportionality (LOP), residual)", European Committee for Standardisation.

EN 14487-1 (2006) *"Sprayed concrete. Definitions, specifications and conformity",* European Committee for Standardisation.

EN 14889-1 *Fibres for Concrete. Steel Fibres. Definition, specifications and conformity – Part 1.*

EN 14889-2 *Fibres for Concrete. Polymer Fibres. Definitions, specifications and conformity – Part 2.*

Eurocode 2 (2004) "Design of Concrete Structures", (EN Nordtest 443, 1995. "Accelerated chloride penetration", Nordtest, Finland.

Nordtest 443 (1995) "Accelerated chloride penetration", Nordtest, Finland.

Nordtest 492 (1999) "Non-Steady State Chloride Migration (Diffusion Coefficient)", Nordtest, Finland

ISO 834 (2014) "Fire resistance tests, Elements of building construction", International Standards Organisation.

Swedish Standard SS 137243 *Concrete testing – Hardened concrete, shotcrete and plaster – Adhesion strength* (in Swedish), 1987.

Useful Websites

ACI:	www.concrete.org
ASTM:	www.astm.org
ASA:	www.shotcrete.org
JCI:	www.jsce.org.jp
Standards Australia:	www.standard.org.au
EFNARC:	www.efnarc.org

Purchasing Australian and International standards (including Euronorms) in Australia:
www.infostore.saiglobal.com





